MULTiMO

240 - CORNER BED

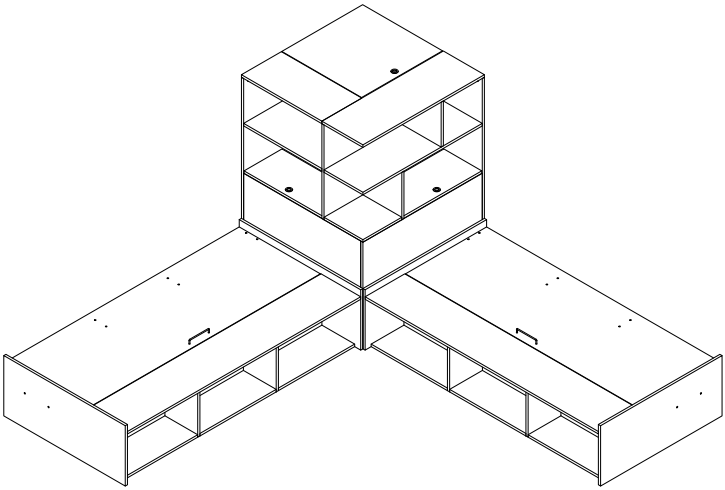

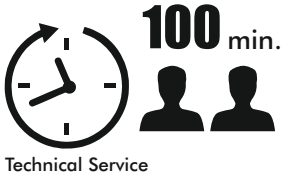

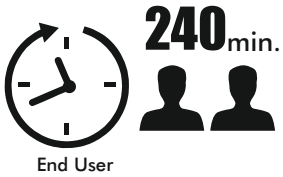

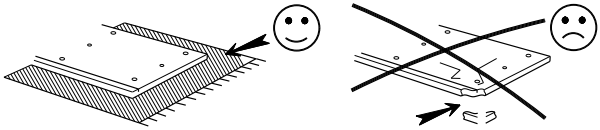

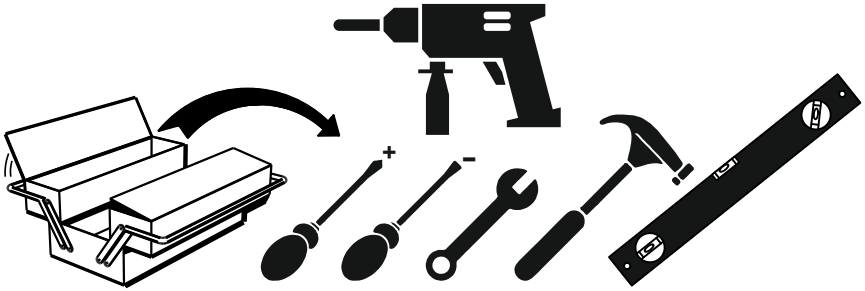

VIDEO

link

Assembly Instructions

MULTiMO

Track Title	Piece	(inch)			(mm)			
		Thickness	Length	Width	Piece	Thick	Height	Most
A	1	0,71	56,54	38,66	1	18	1436	982
B	1	0,71	56,54	39,37	1	18	1436	1000
C	1	0,71	26,61	38,66	1	18	676	982
D	1	0,71	26,61	25,35	1	18	676	644
E	1	0,71	29,92	38,66	1	18	760	982
F	1	0,71	29,92	37,95	1	18	760	964
G	1	0,71	38,66	12,60	1	18	982	320
H	1	0,71	25,35	12,60	1	18	644	320
K	1	0,71	13,31	12,60	1	18	338	320
L	1	0,71	12,60	12,60	1	18	320	320
M	1	0,71	12,60	12,60	1	18	320	320
N	1	0,71	29,92	37,95	1	18	760	964
P	1	0,71	29,92	26,06	1	18	760	662
R	1	0,71	39,37	13,31	1	18	1000	338
S	1	0,71	26,06	12,95	1	18	662	329
T	1	0,71	25,35	25,35	1	18	644	644
U	1	0,71	26,22	25,87	1	18	666	657
V	2	0,71	25,20	12,28	2	18	640	312

Accessories List

MNX 02

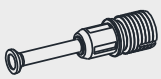

62 / piece

MNG - 01

62 / piece

KVL 01

60 / piece

TAP - 01

62 / piece

VD - 03 (3,5x18) mm

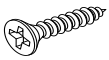

44 / piece

KPG - 01

3 / piece

TS - 01

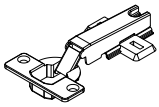

2 / piece

TS - 02

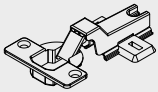

4 / piece

AMR - 01 (120N)

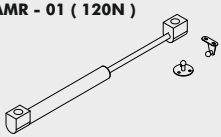

4 / piece

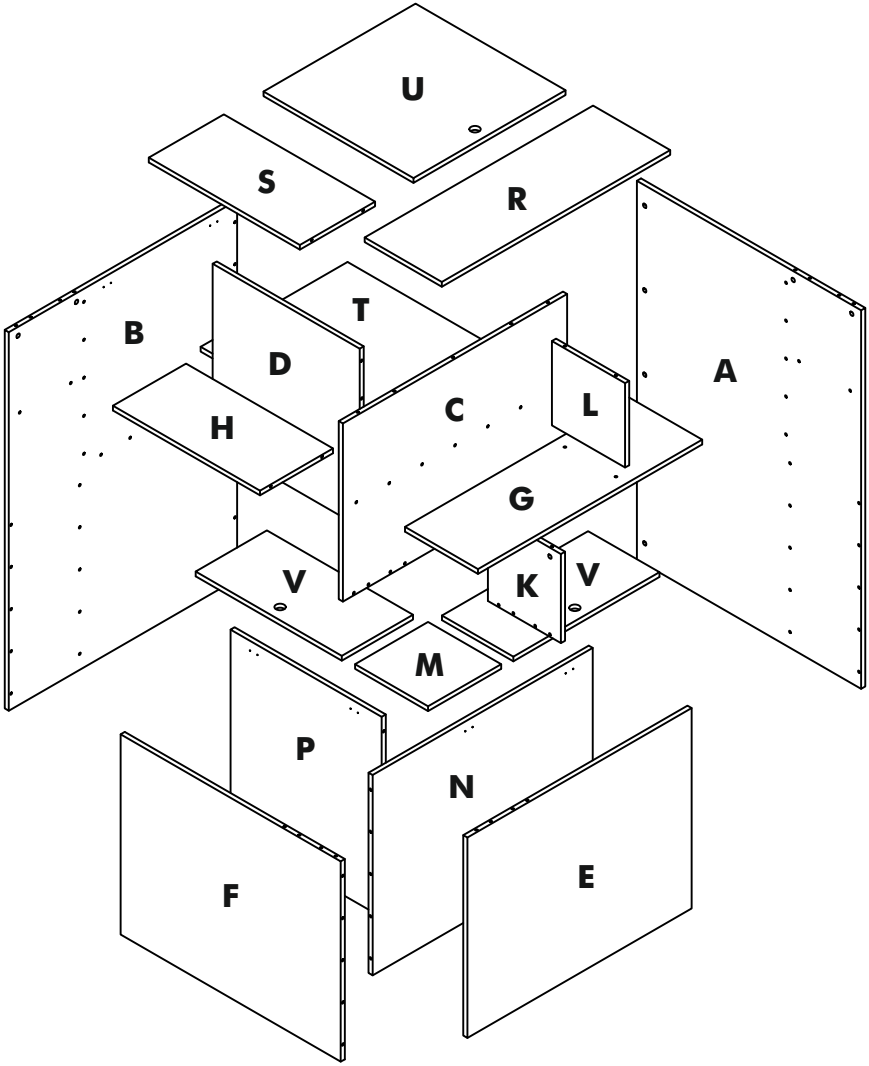
U
S
R
T
B
D
A
C
L
H
G
V
K
V
M
P
N
F
E

MULTiMO

STEP 1

MNX - 02

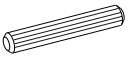

KVL 01

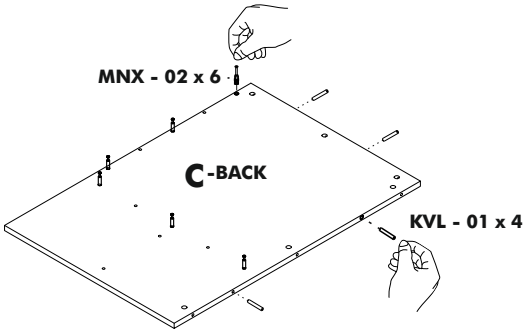

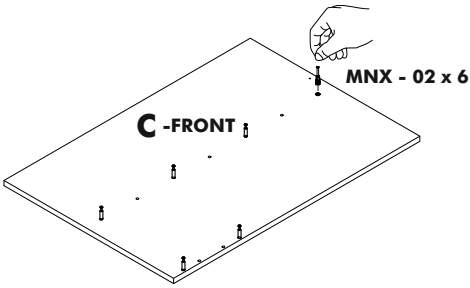

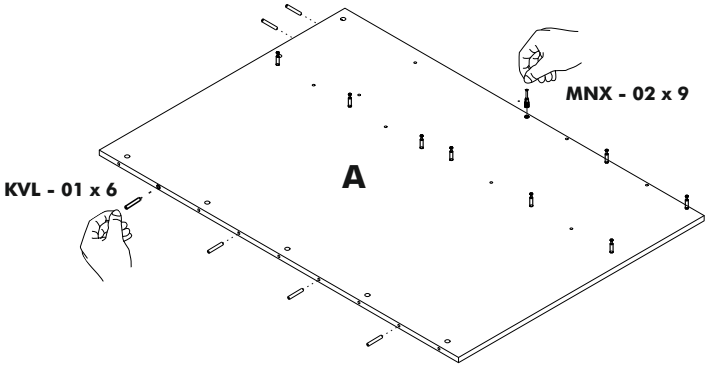

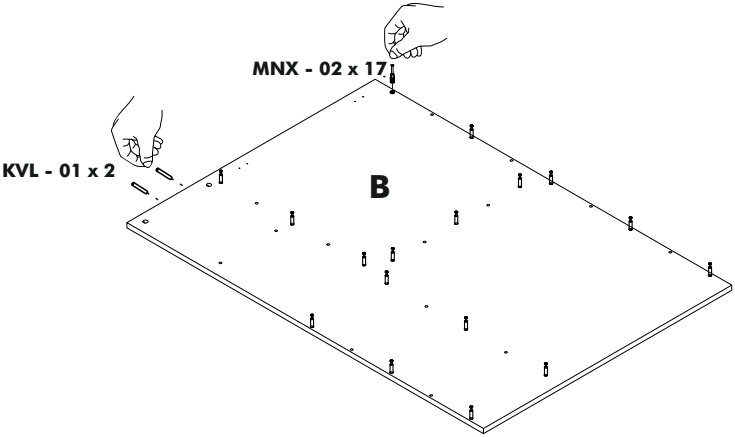

VIDEO

link

STEP 2

MNX - 02

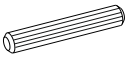

KVL 01

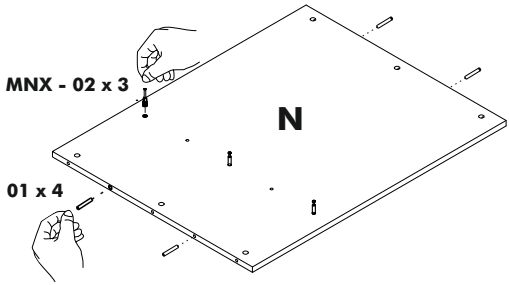

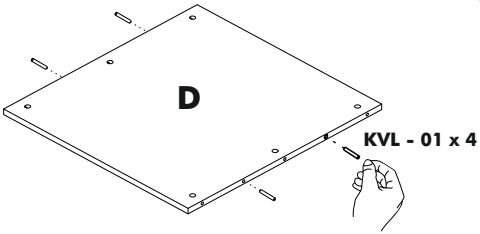

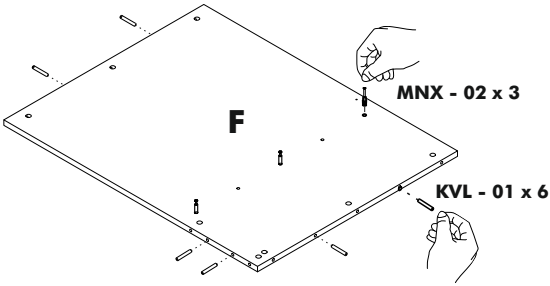

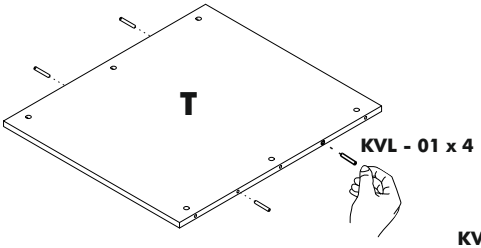

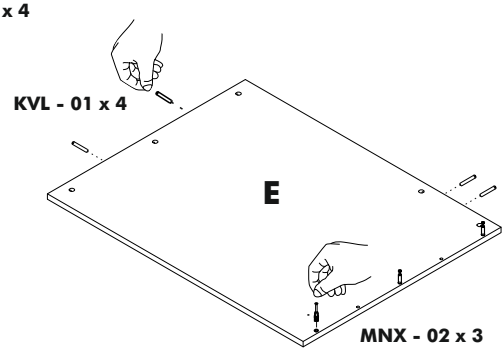

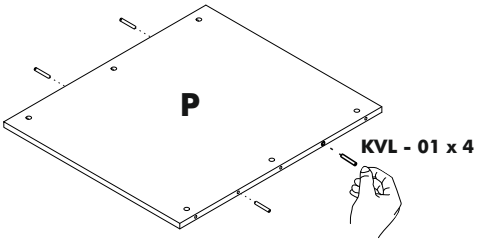

VIDEO

link

MULTiMO

STEP 3

MNX - 02

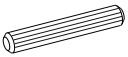

KVL 01

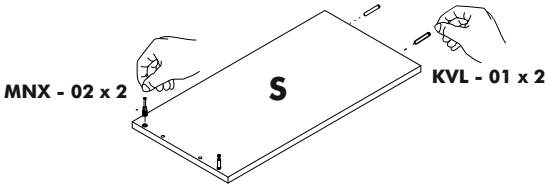

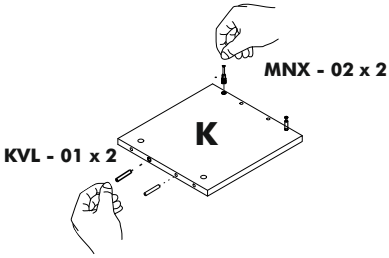

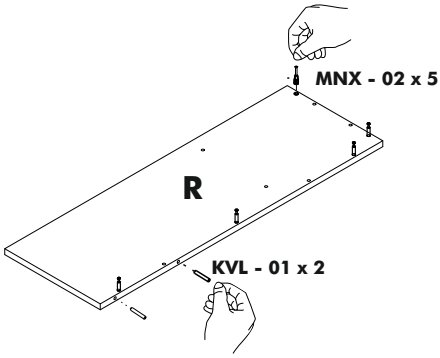

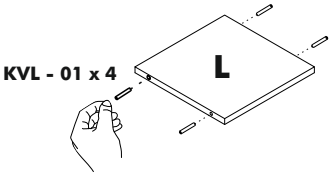

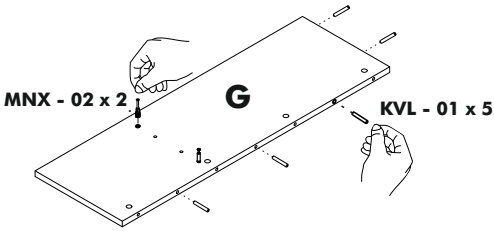

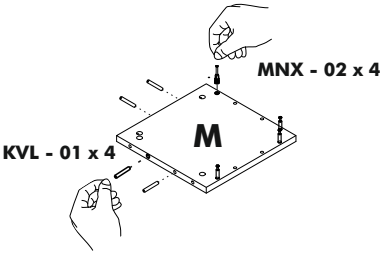

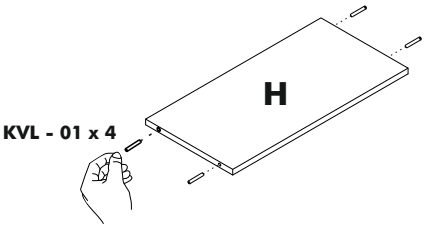

VIDEO

link

STEP 4

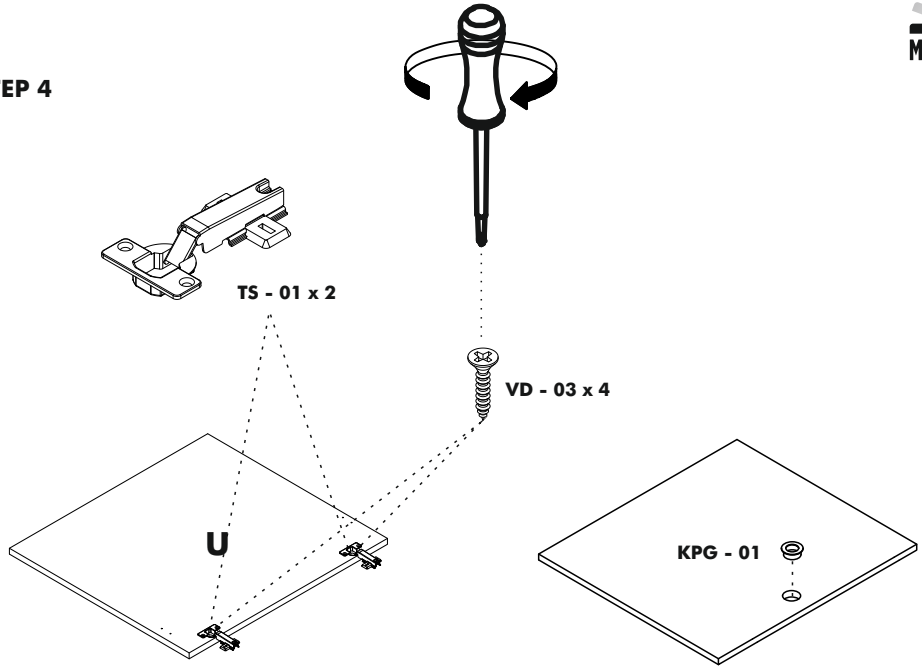

STEP 5

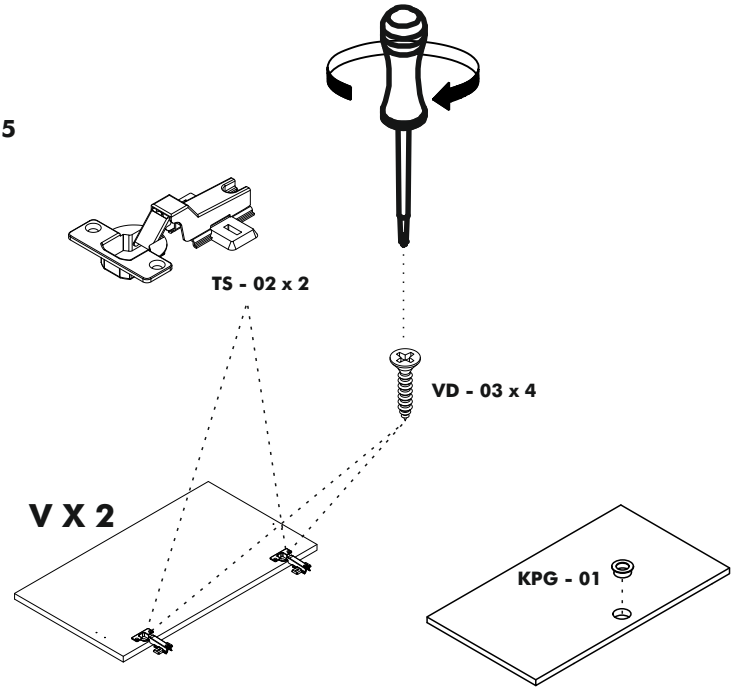

VIDEO

link

MULTiMO

STEP 6

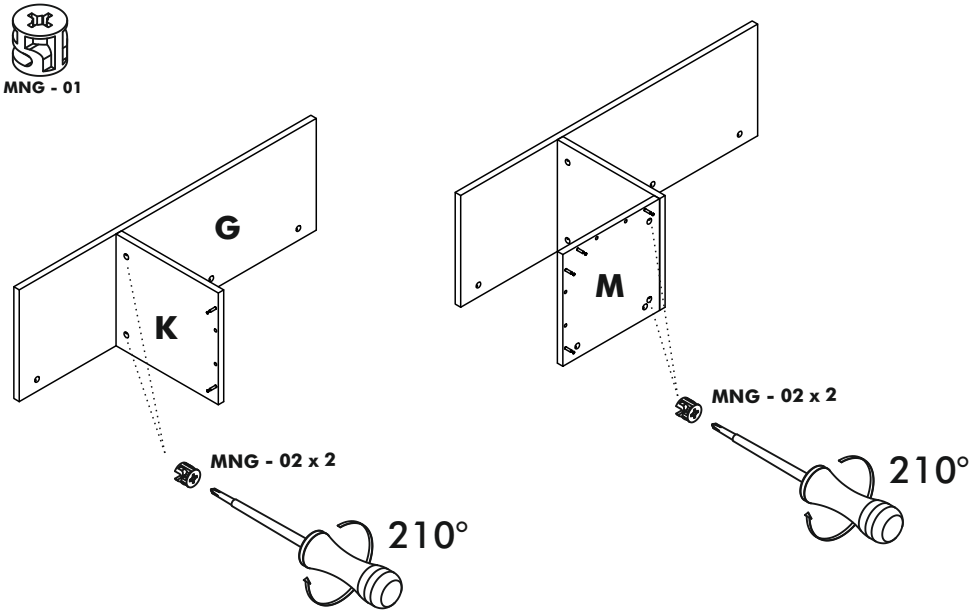

STEP 7

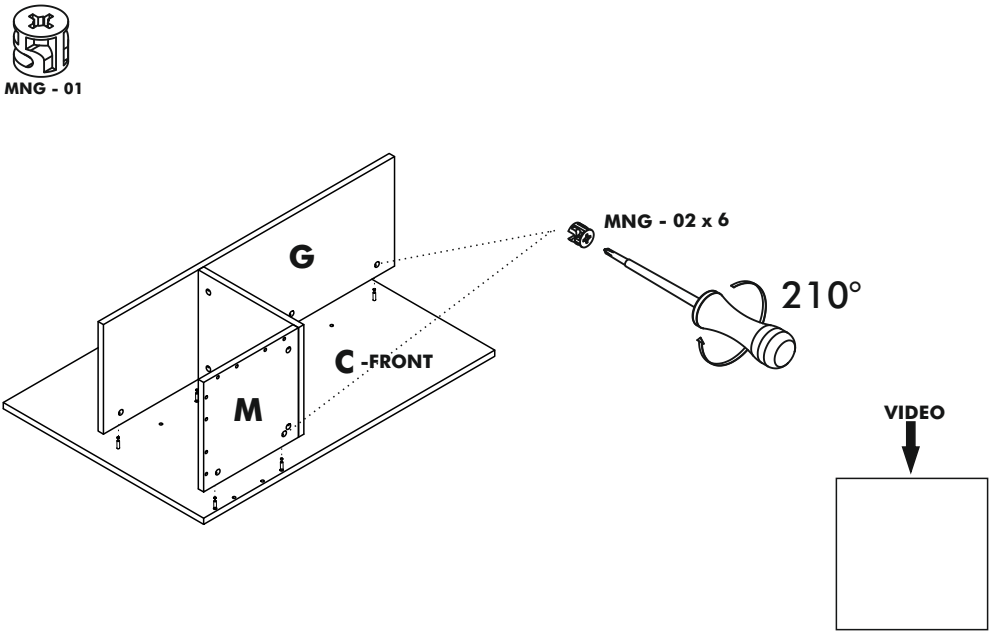

link

STEP 8

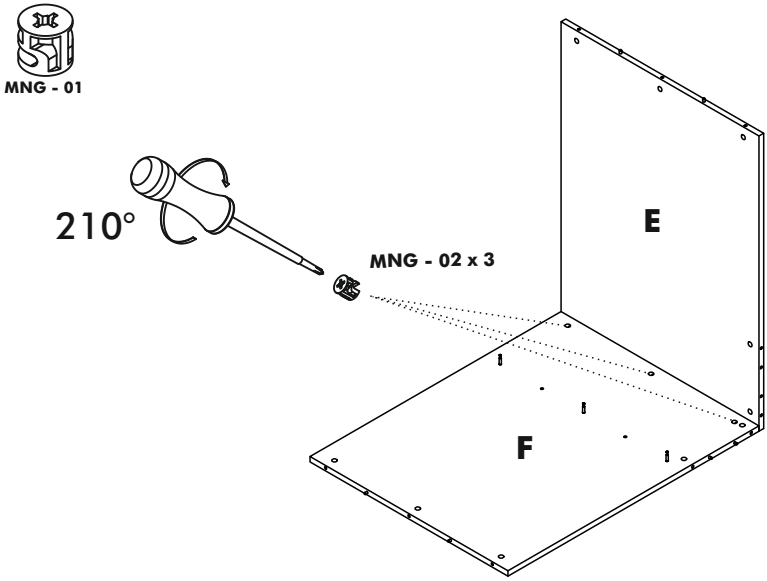

STEP 9

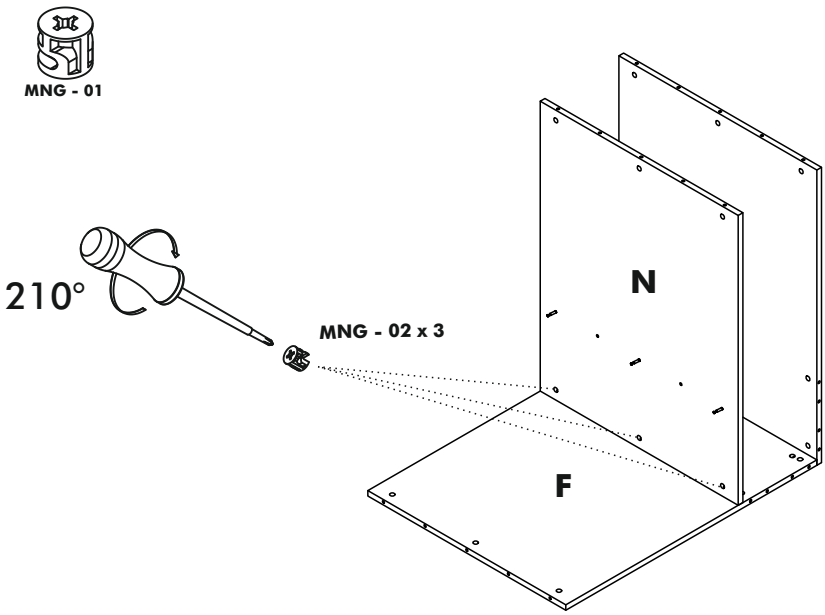

VIDEO

link

MULTiMO

STEP 10

MNG - 01

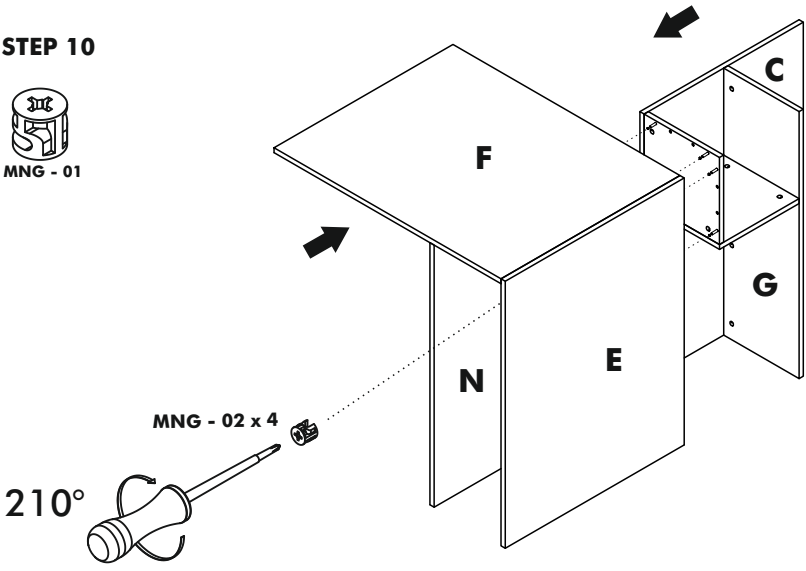

STEP 11

MNG - 01

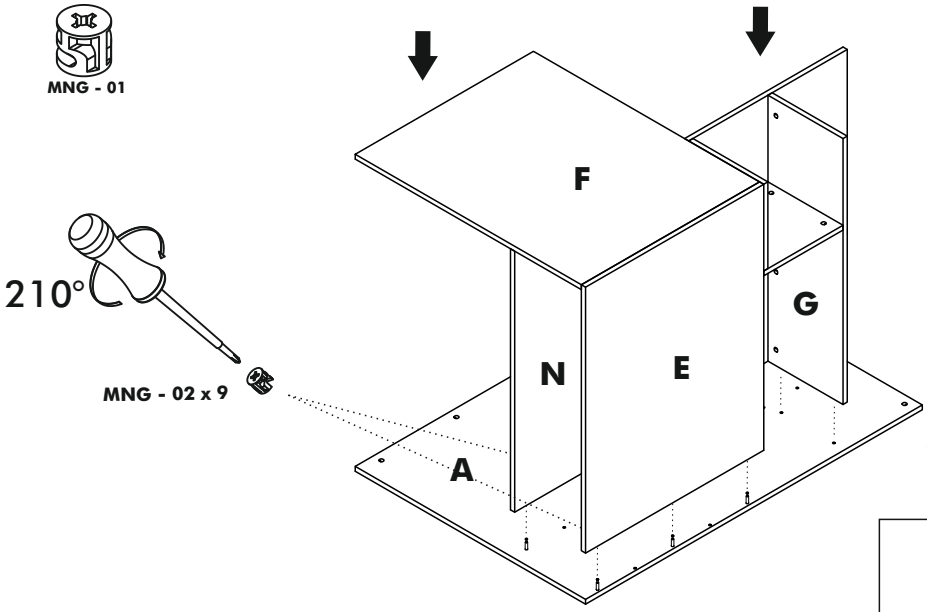

VIDEO

link

STEP 12

MNG - 01

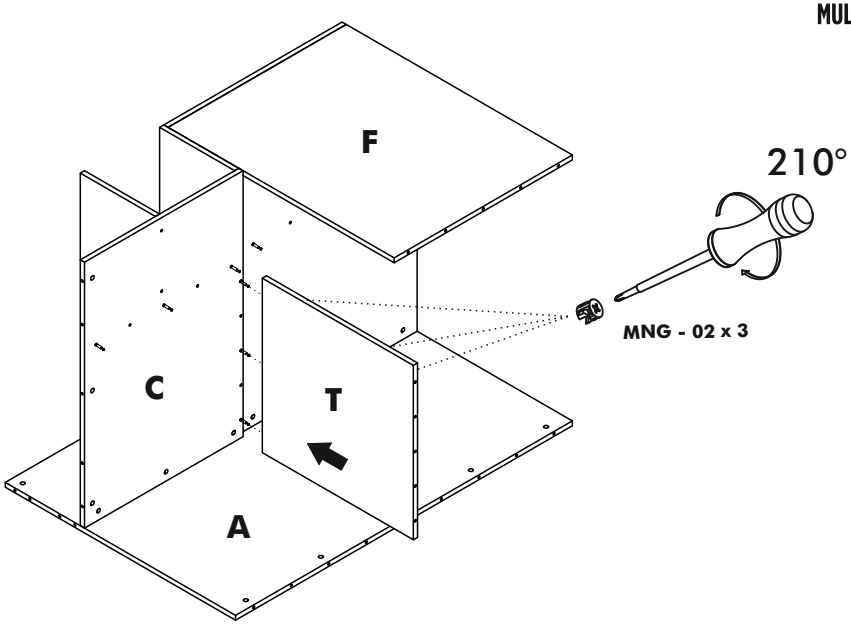

STEP 13

MNG - 01

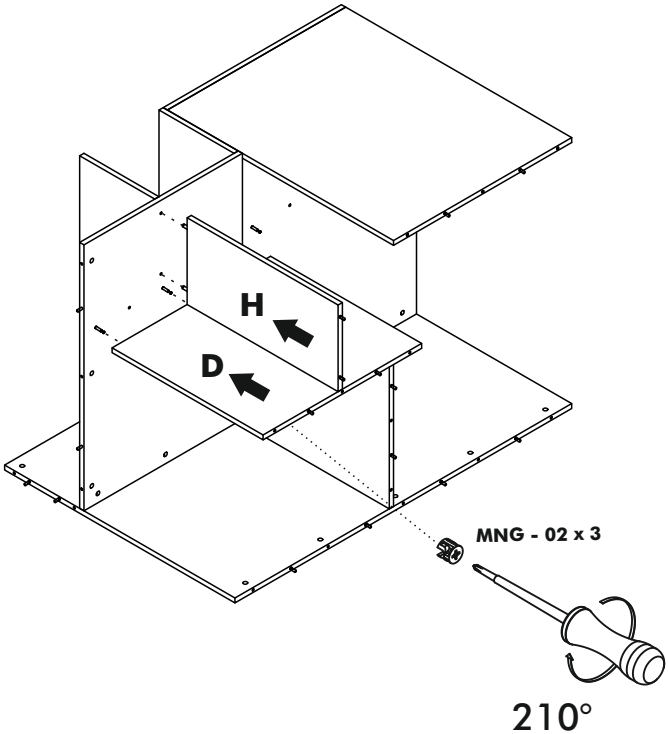

VIDEO

link

MULTiMO

STEP 14

MNG - 01

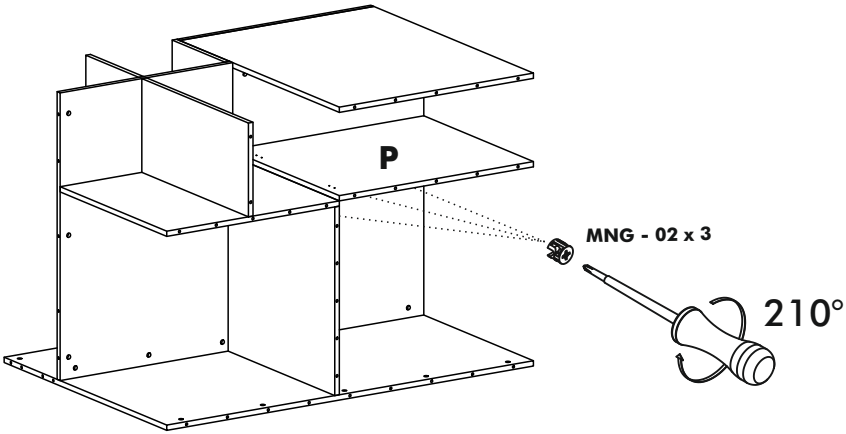

STEP 15

MNG - 01

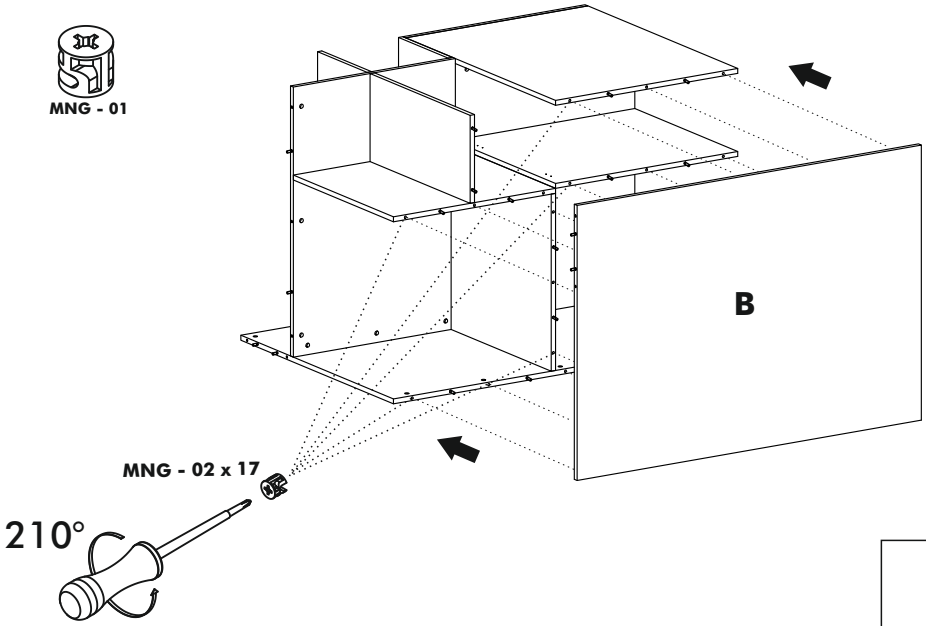

VIDEO

link

STEP 16

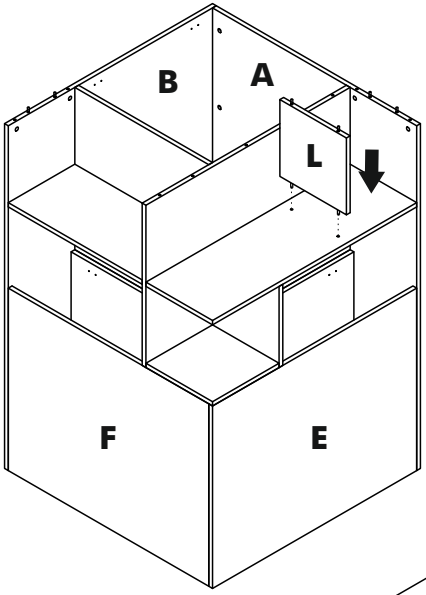

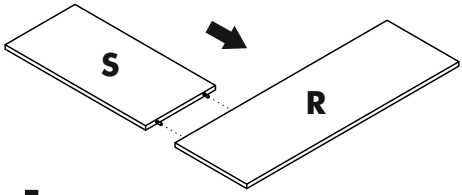

STEP 17

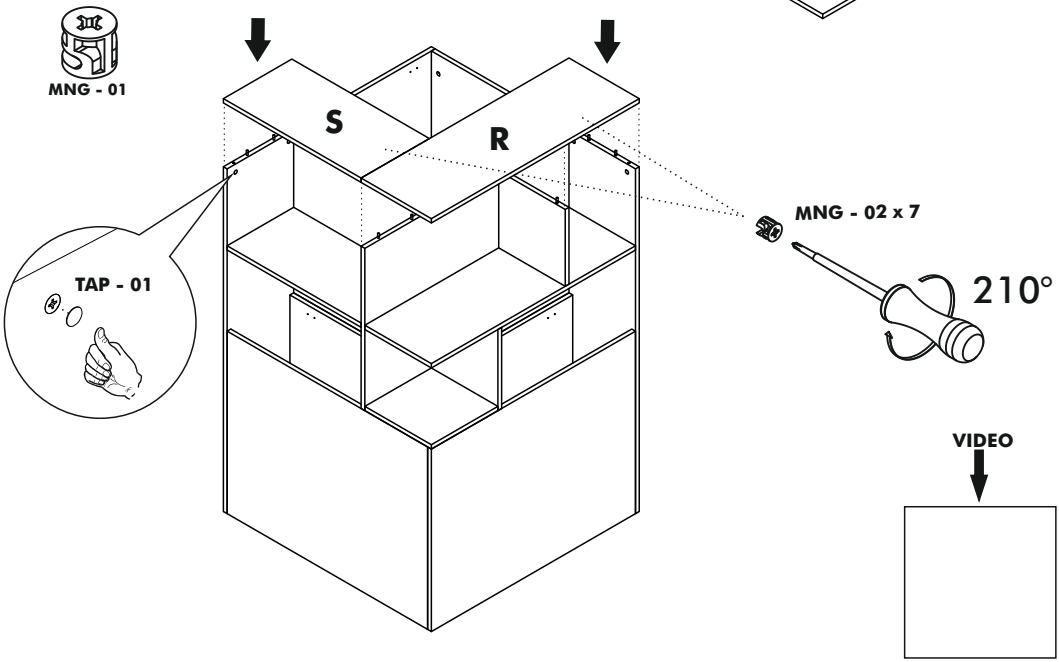

VIDEO

link

MULTiMO

STEP 18

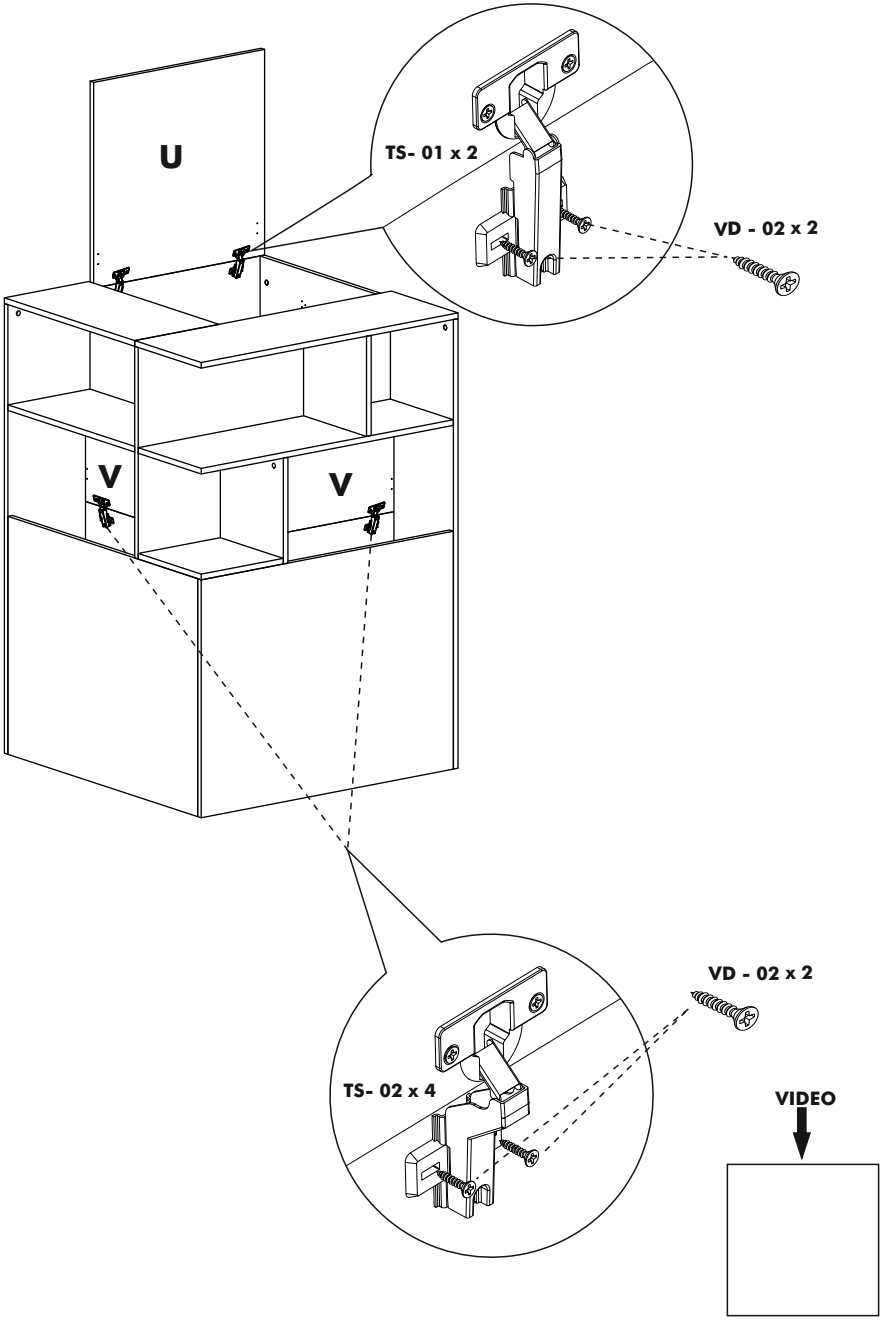

link

STEP 19

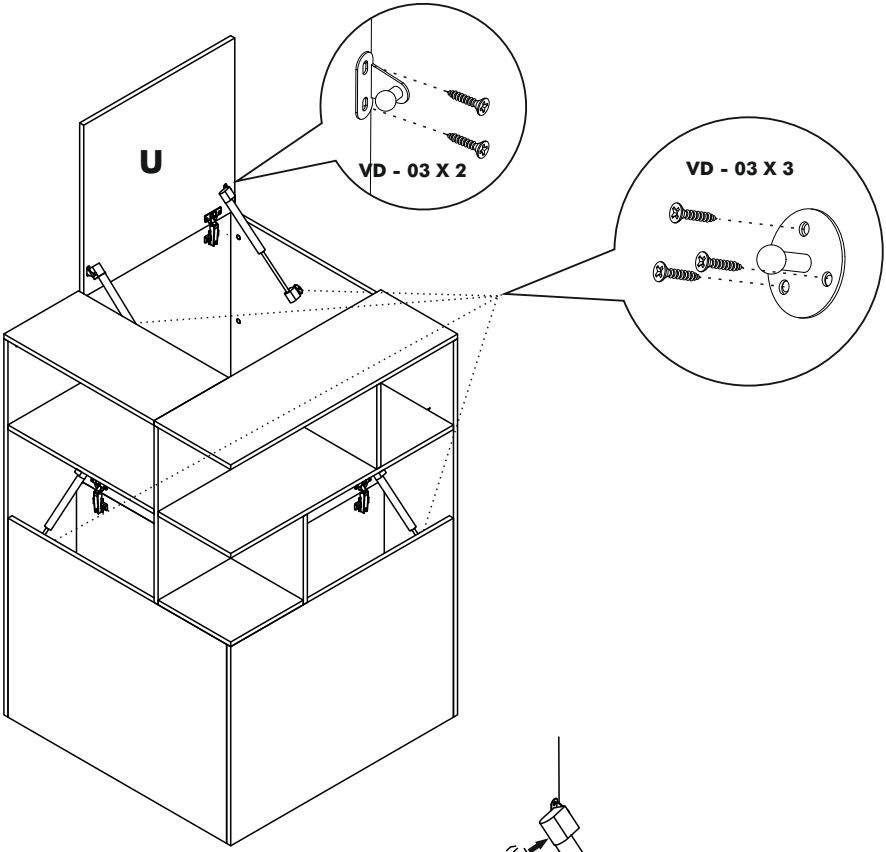

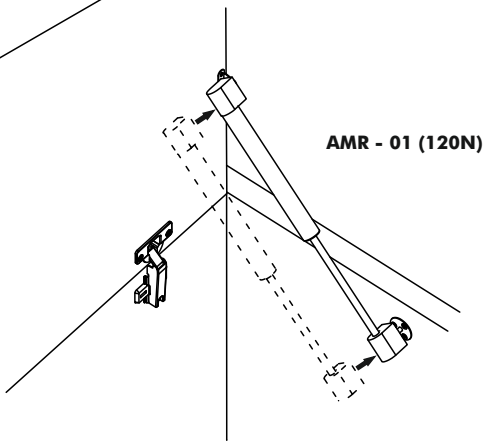

VIDEO

link

MULTiMO

Track Title	Piece	(inch)			(mm)			
		Thickness	Length	Width	Piece	Thick	Height	Most
1-A (R-L)		0,71	39,37	16,93	4	18	1000	430
1-B (R-L)		0,71	36,69	14,25	4	18	932	362
1-C		0,71	75,59	14,25	2	18	1920	362
1-D		0,71	24,72	14,25	6	18	628	362
1-E		0,71	24,72	10,63	6	18	628	270
1-F		0,71	75,59	12,87	2	18	1920	327
1-G		0,71	75,43	26,30	2	18	1916	668

Accessories List

MNX 02 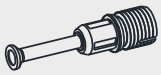 **44 / piece**	**MNG - 01** **60 / piece**	**KVL 01** **104 / piece**	**TAP - 01** **60 / piece**
MNX - 03 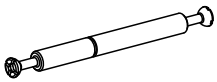 **8 / piece**	**CT - 04 (6x20) mm** 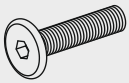 **24 / piece**	**MKS - 01** 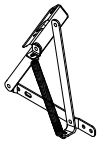 **6 / piece**	**KP - 04** 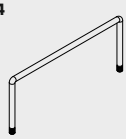 **2 / piece**
SN - 01 (M6) **4 / piece**	**PL - 01 (6x19x1) mm** **4 / piece**	**AL - 01 (4MM)** **2 / piece**	

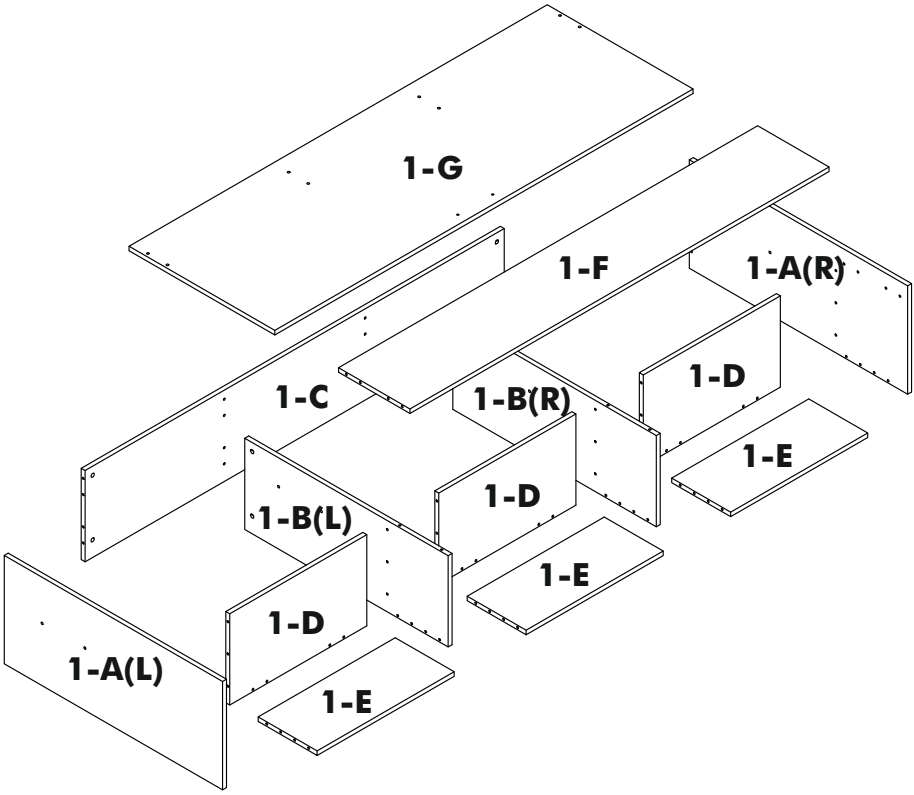
1-G
1-F
1-A(R)
1-D
1-C
1-B(R)
1-E
1-D
1-B(L)
1-E
1-D
1-A(L)
1-E

MULTiMO

STEP 1

MNX - 02

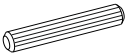

KVL 01

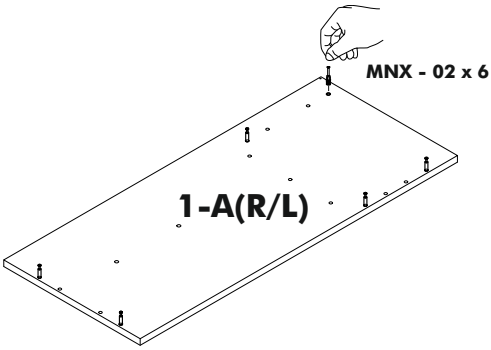

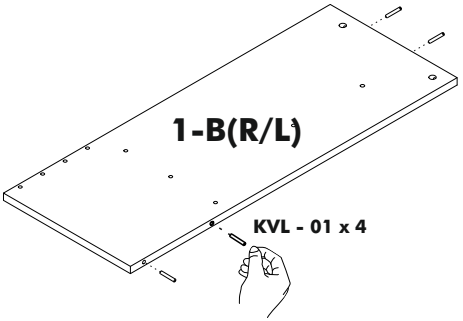

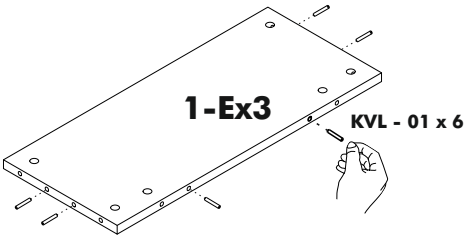

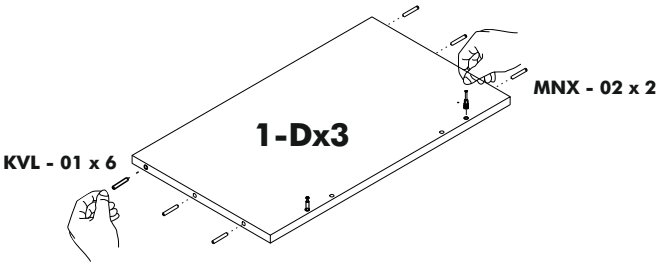

VIDEO

link

STEP 2

MNX - 02

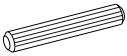

KVL 01

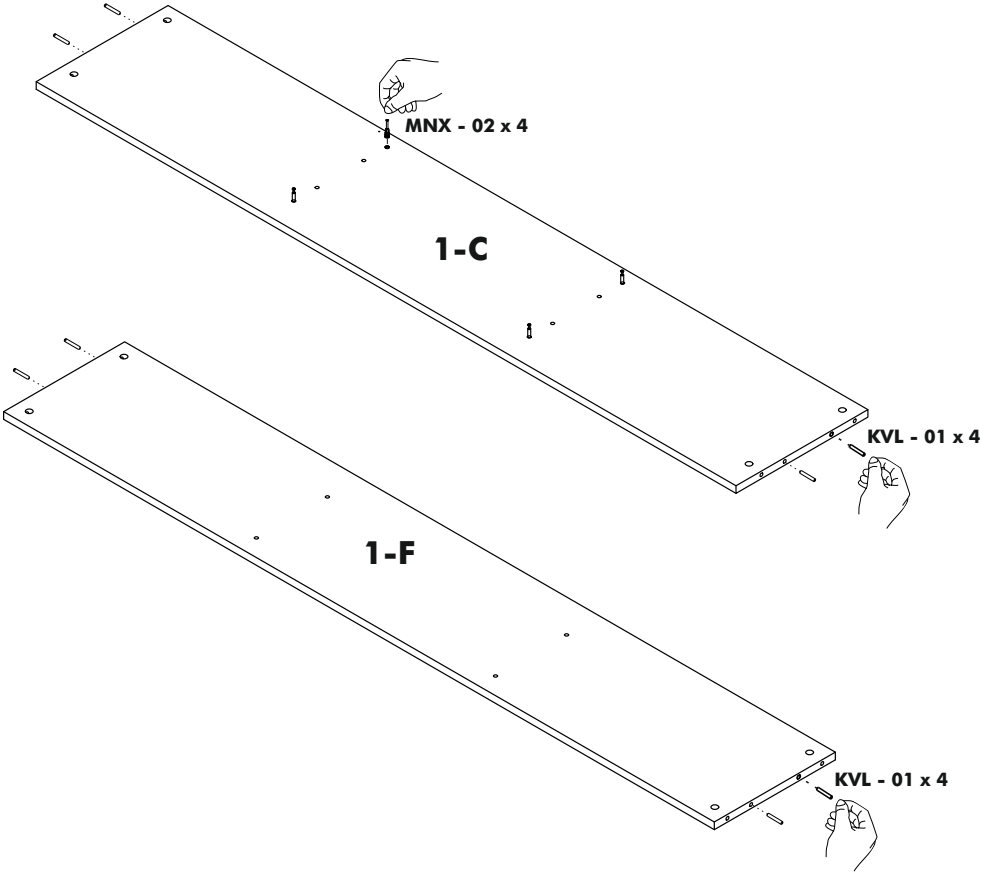

VIDEO

link

MULTiMO

STEP 3

MNG - 01

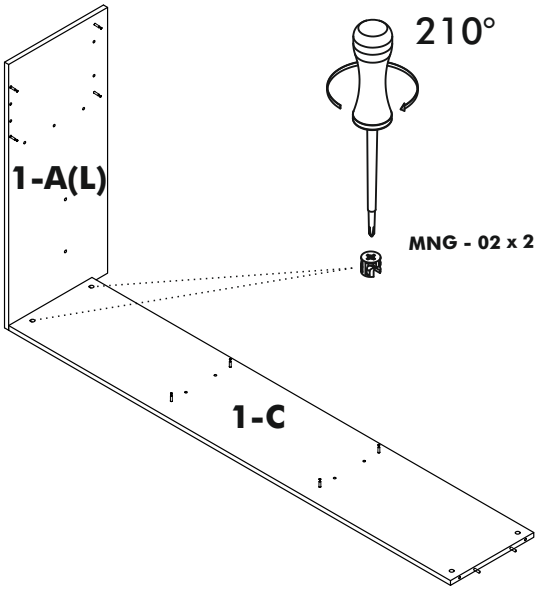

STEP 4

MNG - 01

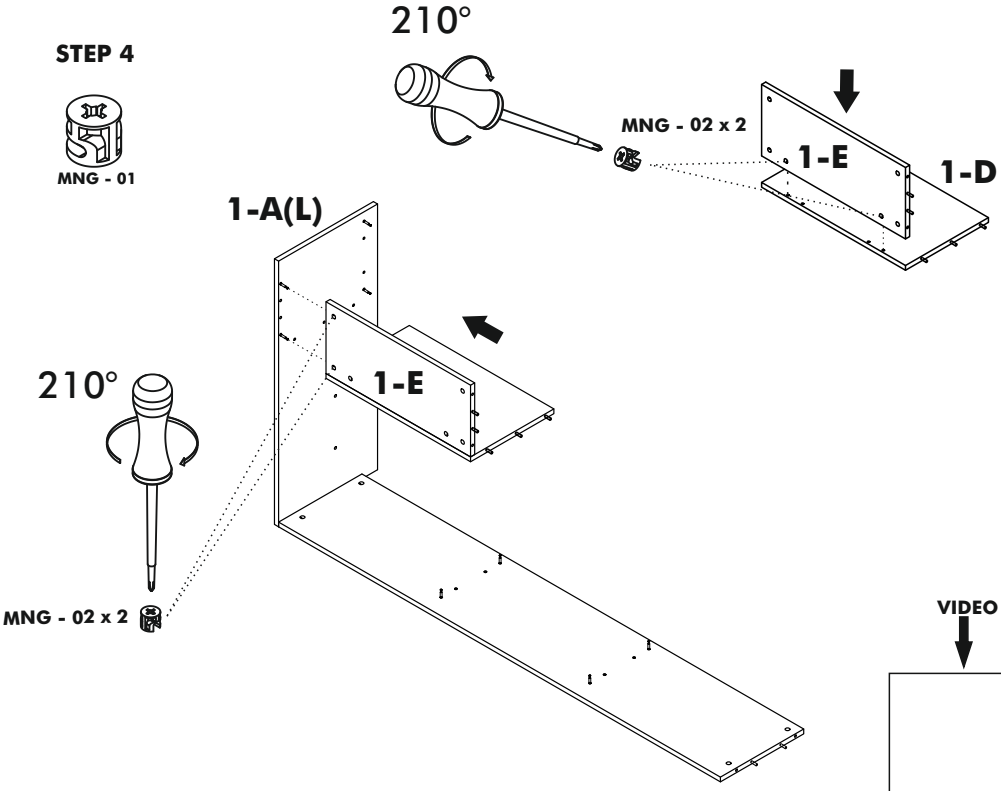

VIDEO

link

STEP 5

MNG - 01

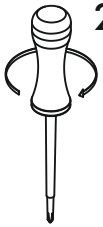

210°

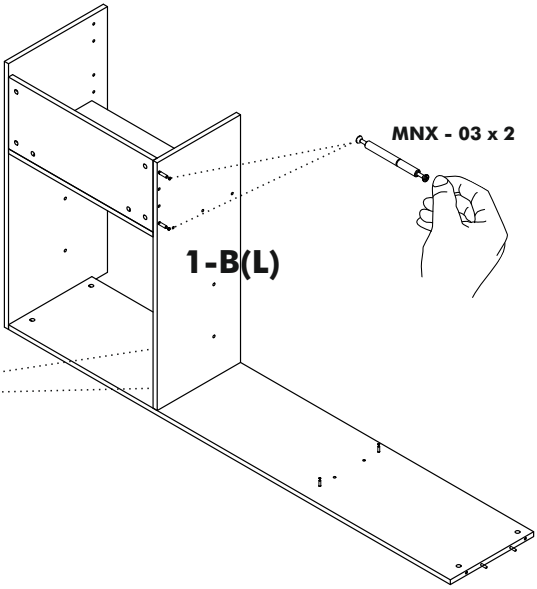

MNX - 03 x 2

1-B(L)

MNG - 02 x 2

STEP 6

MNG - 01

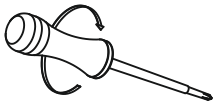

210°

MNG - 02 x 2

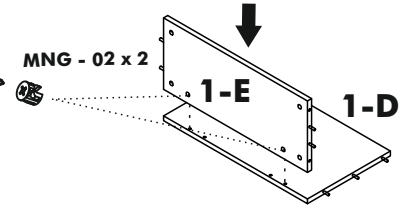

1-E

1-D

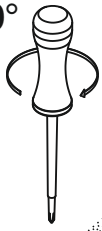

210°

MNG - 02 x 4

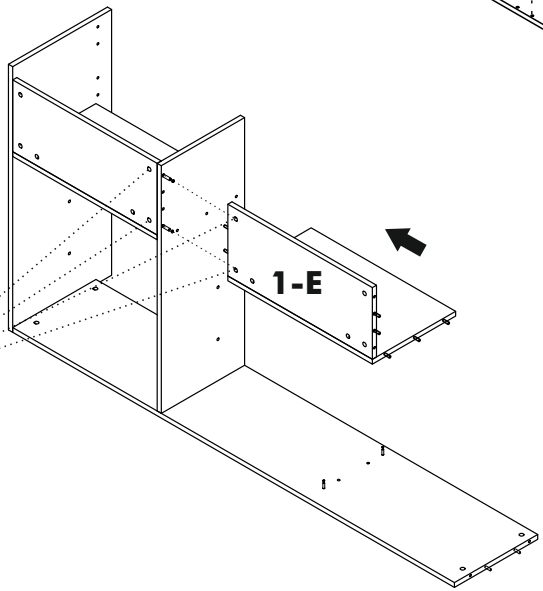

1-E

VIDEO

link

MULTiMO

STEP 7

MNG - 01

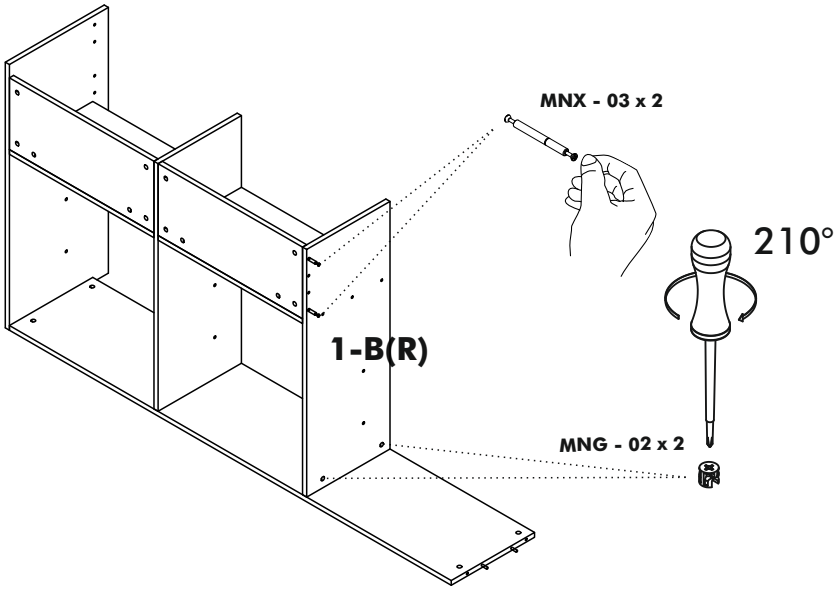

STEP 8

MNG - 01

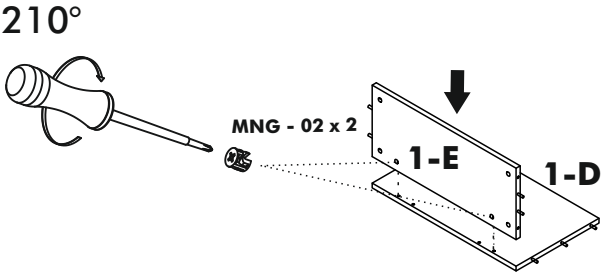

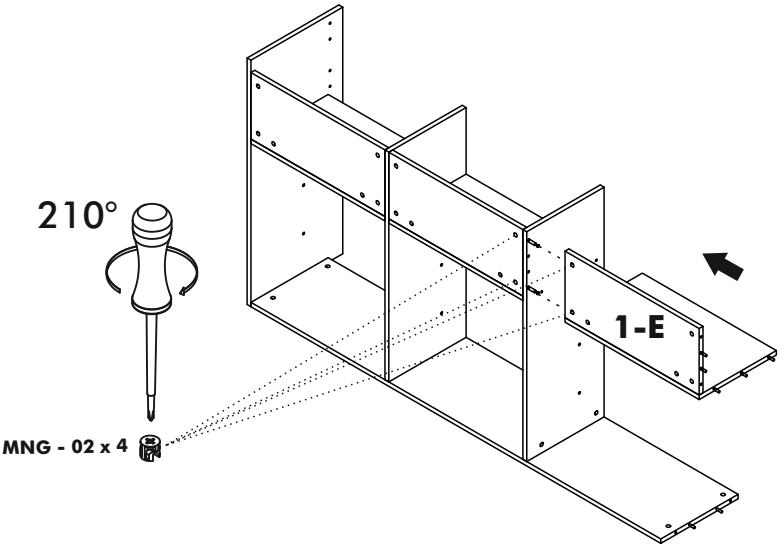

VIDEO

link

STEP 9

MNG - 01

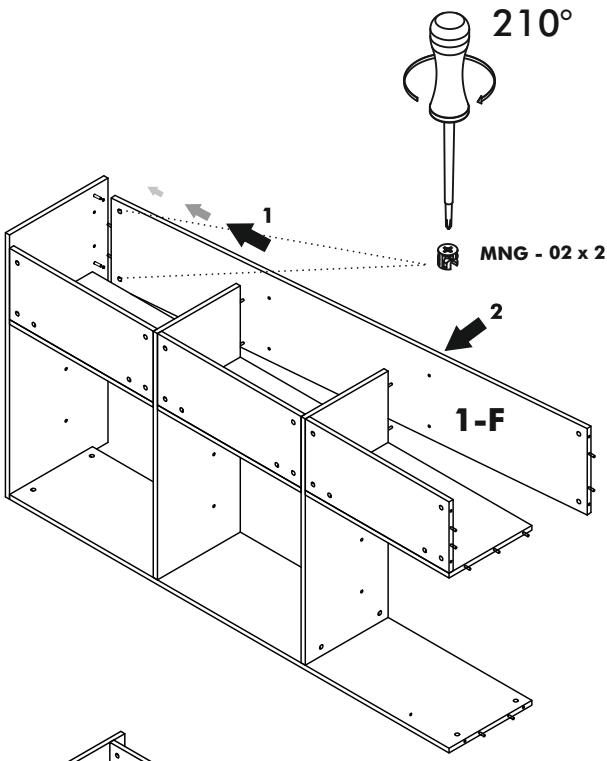

STEP 10

MNG - 01

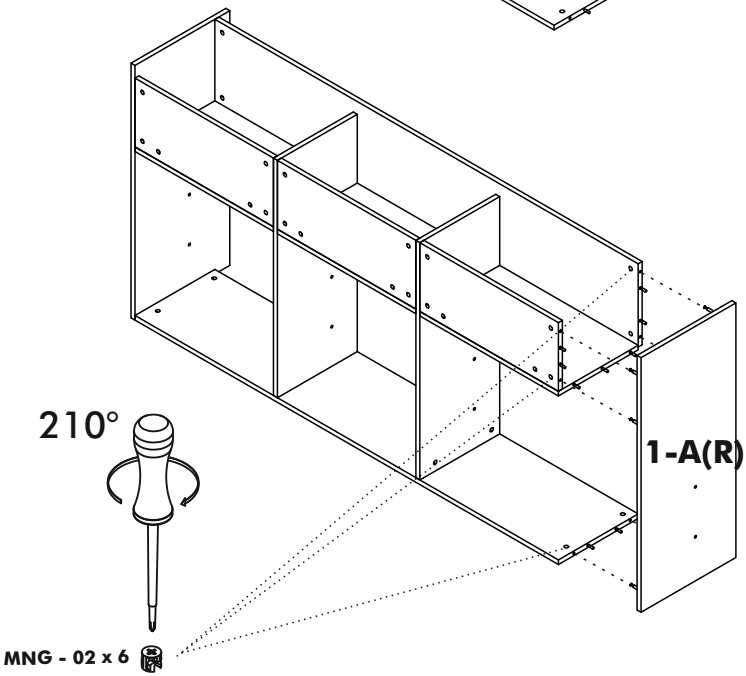

VIDEO

link

MULTiMO

STEP 11

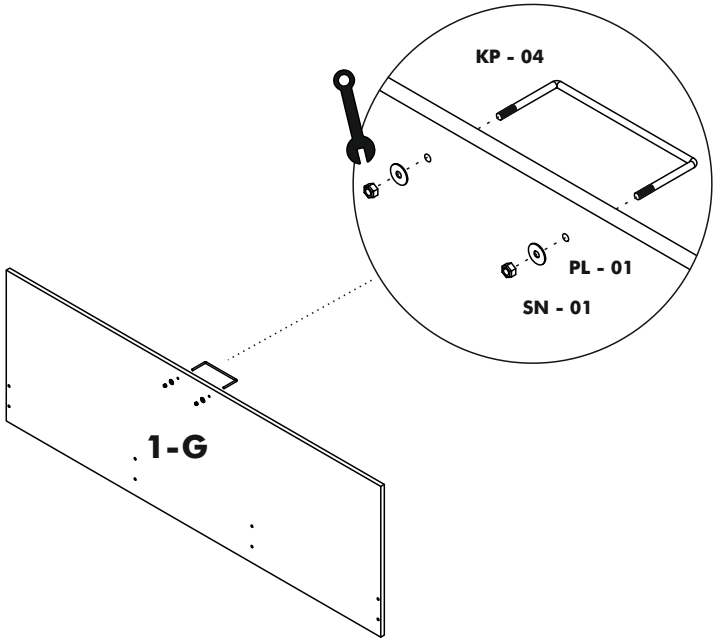

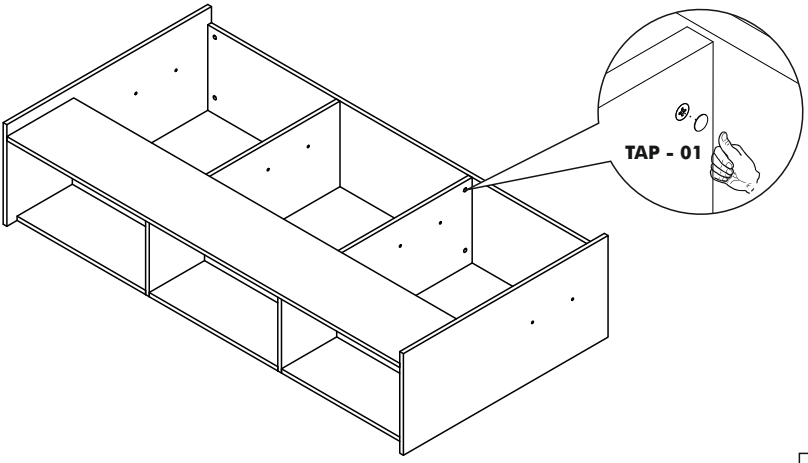

VIDEO

link

STEP 12

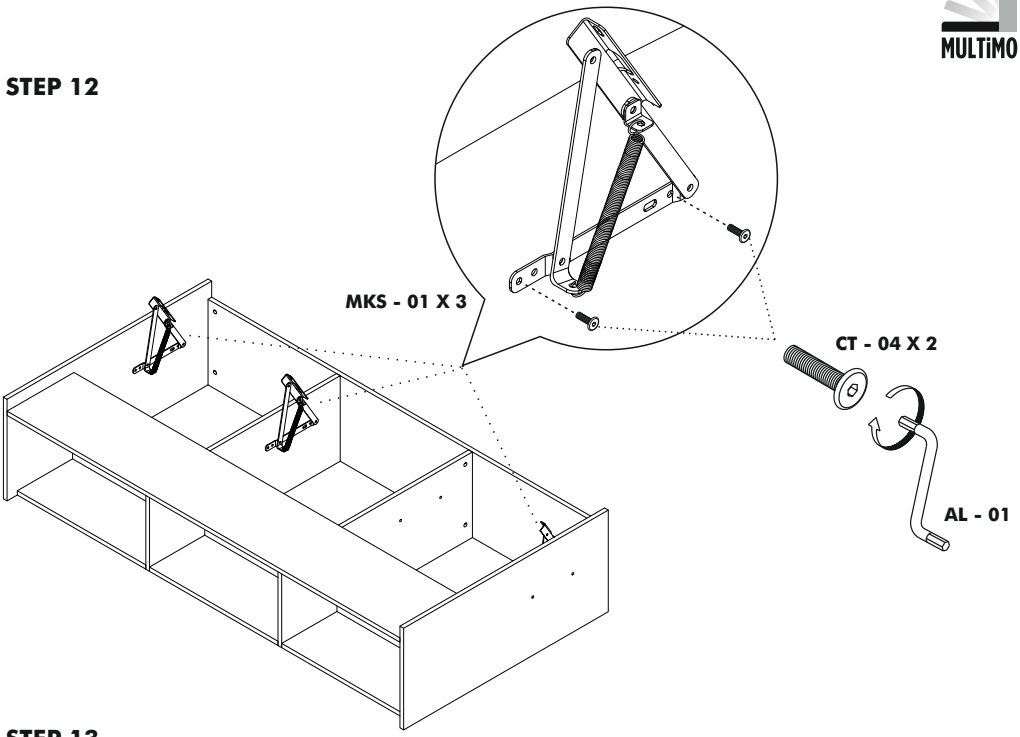

STEP 13

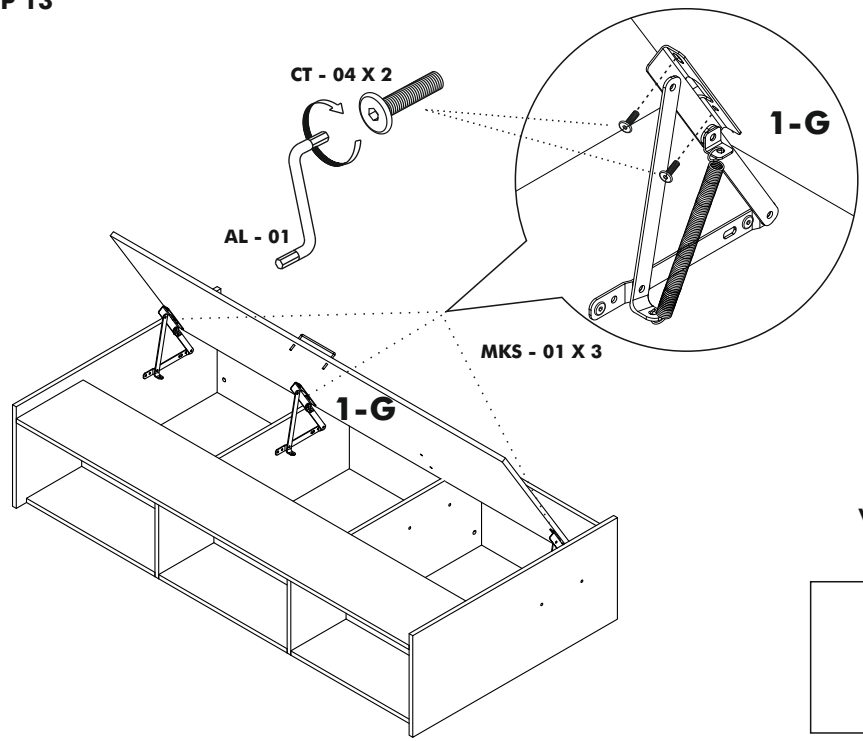

VIDEO

link

MULTiMO

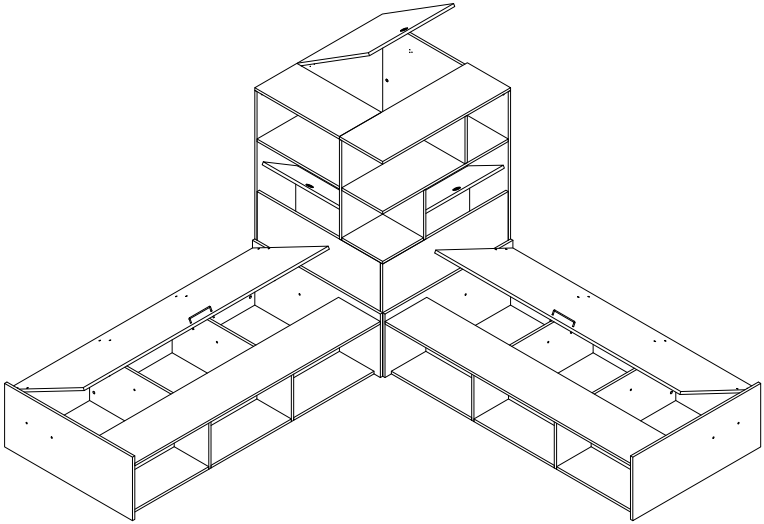

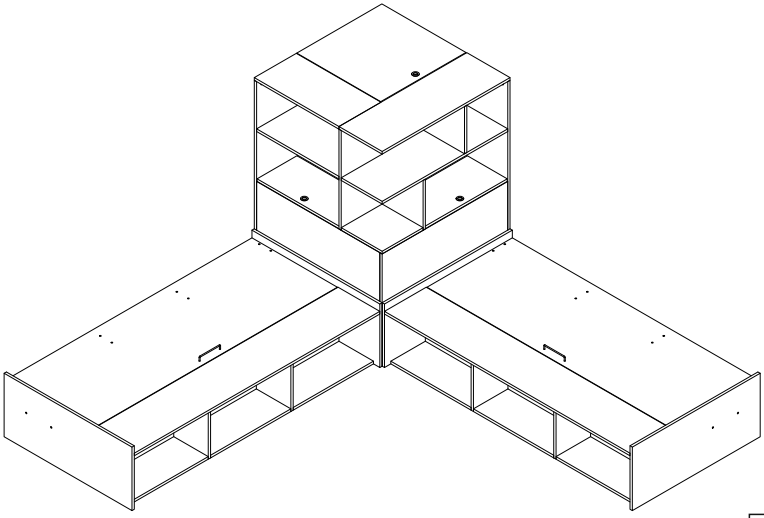

VIDEO

link

ATTENTION / HOW TO / READ ME / OWNER'S GUIDE

1. When mounting on a regular drywall, furniture must be fastened to wood or metal studs. Solid walls made of brick, concrete or similar strong material are also accaptable. Do not mount furniture to paper-mache or sheet rock like material without properly aaixing to stud.

2. For safety and product longevity you must periodically inspect the mounting and mechanical connections for integrity and tightness. Confirm hardware remains properly affixed and connections snug.

3. Wall Bed mattress thickness may not exceed 8 inch. Take care to remove pillows and excess blankets before closing. Doing so keeps mechanism free of obstruction and unnecessary stress.

4. Do not lean or rest heavy objects on side or top of furniture. This may cause balance issues and compromise the integrity of your mounting connections.

5. Please use the furniture's beds, desks and shelving as intended. Not designed to be sat, stood, leaned, jumped (etc) on. Improper use may cause personal injury and damage to property.

6. With seasonal humidity change you must inspect interior and exterior of furniture.

7. Single, Twin, Twin XL beds accommodate the weight of one person. Improperly sleeping more than one person risks injury to person and damage to property.

8. Before any un-mounting or disassembly please contact Multimo for technical support and instruction. Failure to properly detach risks injury to person and damage to property.

9. For Bunk Beds:
a. Always use provided ladder when accessing top bunk.
b. Be slow, careful and aware of surroundings when opening top bunk.
c. Do not horseplay. Beds are to be slept on only.
d. Some have legs that fully extend when open- be aware of where the leg is and will be.

www.multimo.com