MULTiMO

722- PRIMER LIFE

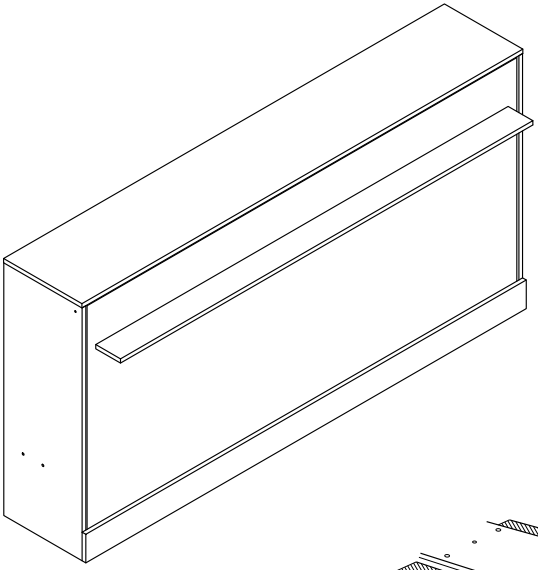

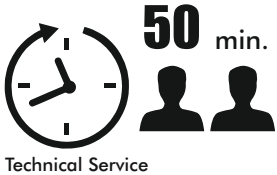

Technical Service

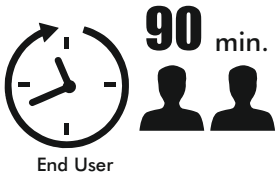

End User

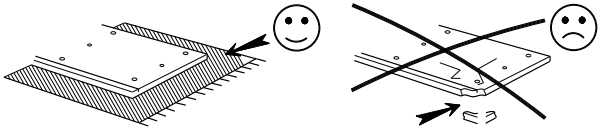

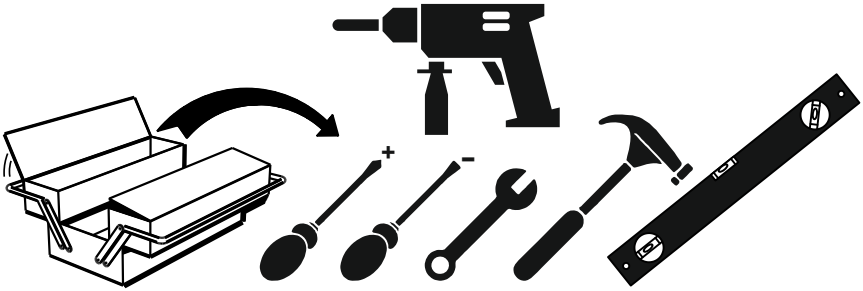

VIDEO

link

Assembly Instructions

MULTiMO

Track Title	Piece	(inch)			(mm)			
		Thickness	Length	Width	Piece	Thick	Height	Most
A-R / A-L		0,71	41,81	14,96	2	18	1062	380
B		0,71	84,17	14,96	1	18	2138	380
C		0,71	82,68	14,96	1	18	2100	380
D		0,71	41,10	10,24	1	18	1044	260
E		0,71	84,09	4,65	1	18	2136	118
F		0,71	78,74	4,72	1	18	2000	120
G		0,71	82,05	38,46	1	18	2084	977
H		0,31	41,73	20,75	4	8	1060	527
M-R / M-L		0,71	37,01	5,91	2	18	940	150
N		0,71	78,90	5,91	2	18	2004	150

Accessories List

MNX 02

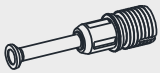

43 / piece

MNG - 01

43 / piece

KVL 01

36 / piece

TAP - 01

43 / piece

VD - 02 (3,5x25) mm

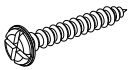

6 / piece

DD - 01 (R10)

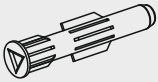

2 / piece

TFC - 01(8x70) mm

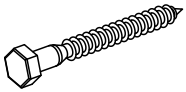

2 / piece

DSE - 01 (40x90x32) mm

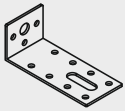

2/ piece

PL - 02 (8x22x1) mm

2 / piece

VTB - 01 (4,8x16) mm

12/ piece

IM - 02 (6x20) mm

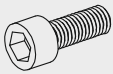

4 / piece

CT - 04 (6x20) mm

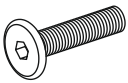

8 / piece

CT - 02 (6x30) mm

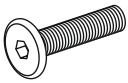

2 / piece

OT-054

2 / piece

PL - 04 (5x12x0,7) mm

4 / piece

VDA - 01 (6,5x50) mm

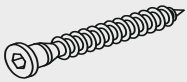

16/ piece

HF - 01 (350 N)

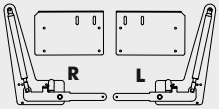

1 / piece

YKR - 01

1 / piece

H 01

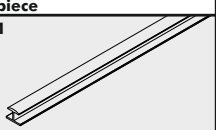

3 / piece

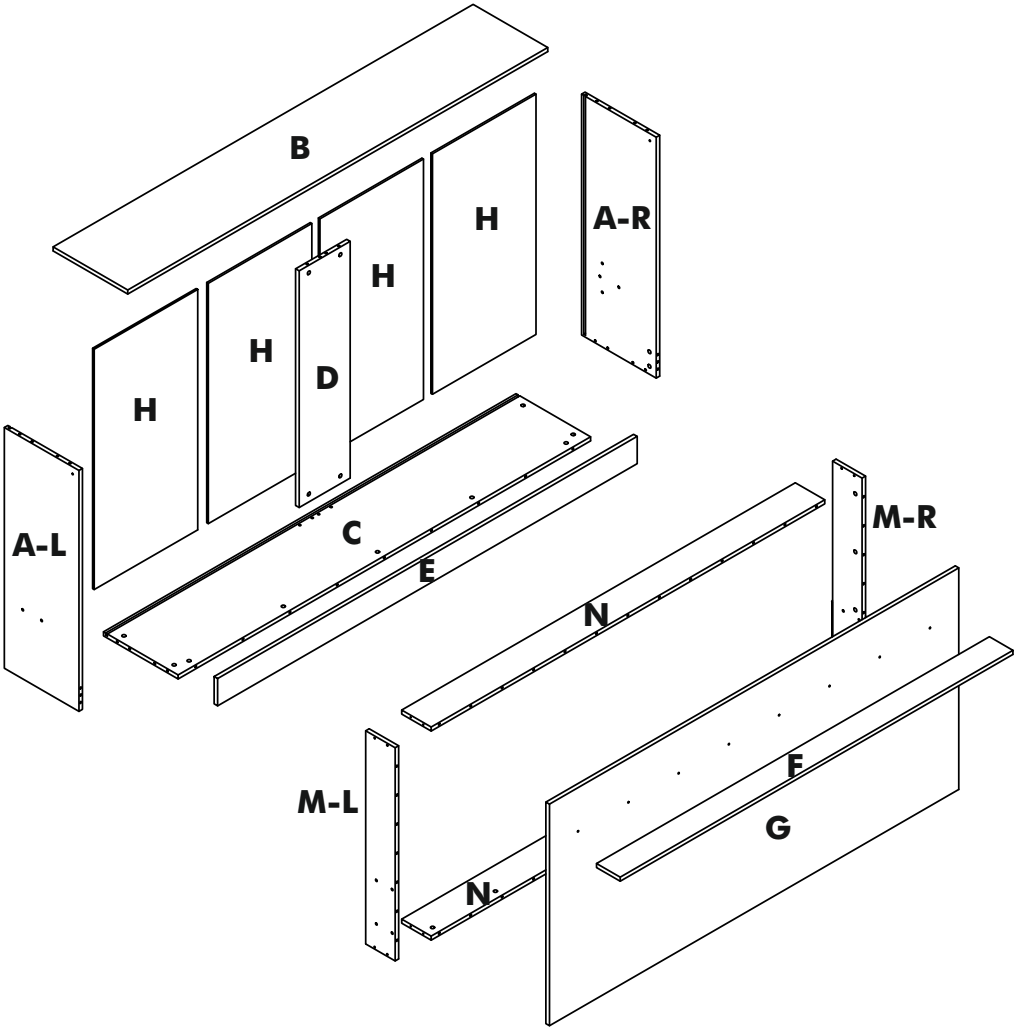
B
H
A-R
H
H
D
H
A-L
C
E
M-R
N
F
M-L
G
N

MULTiMO

STEP 1

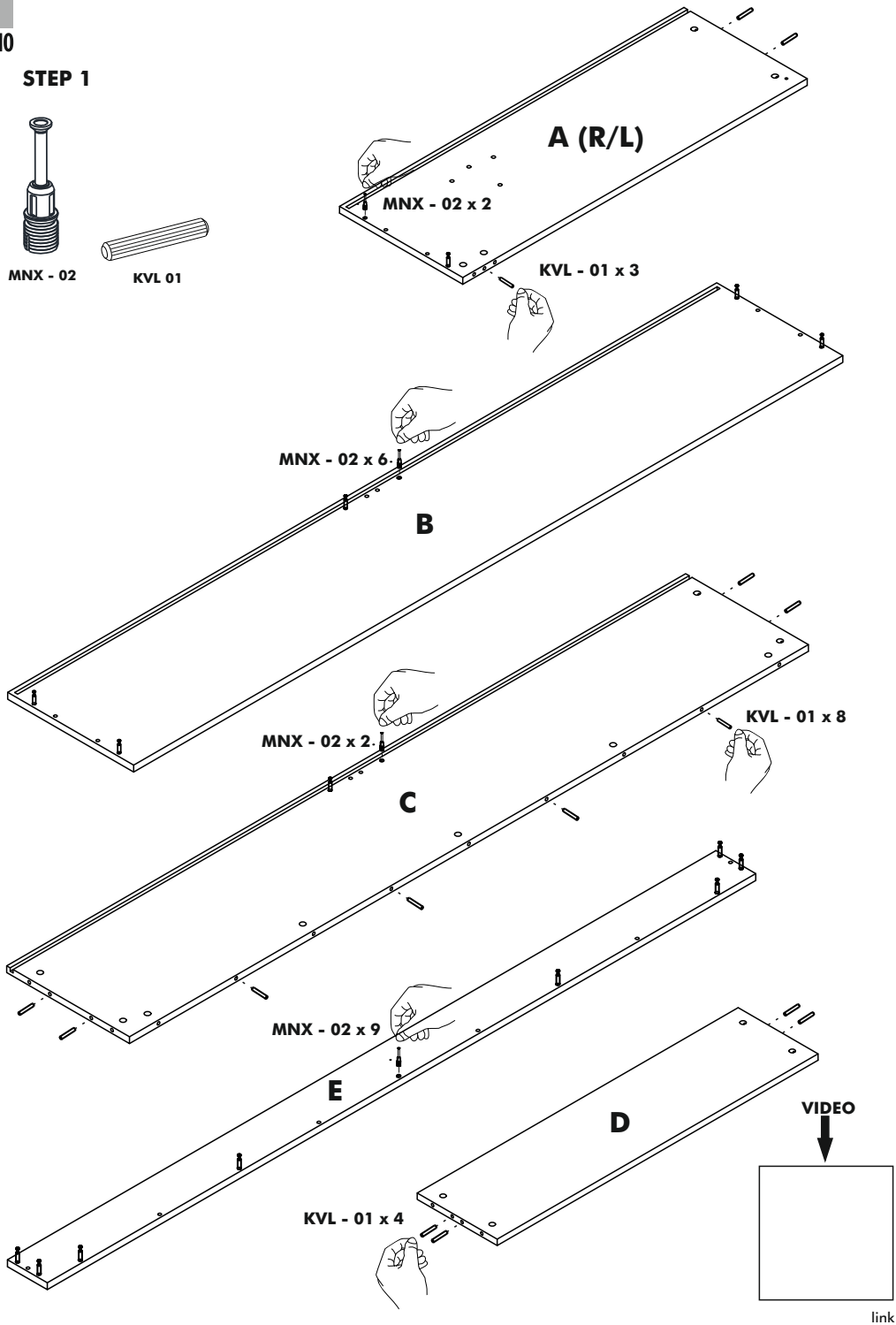

link

STEP 2

MNG - 01

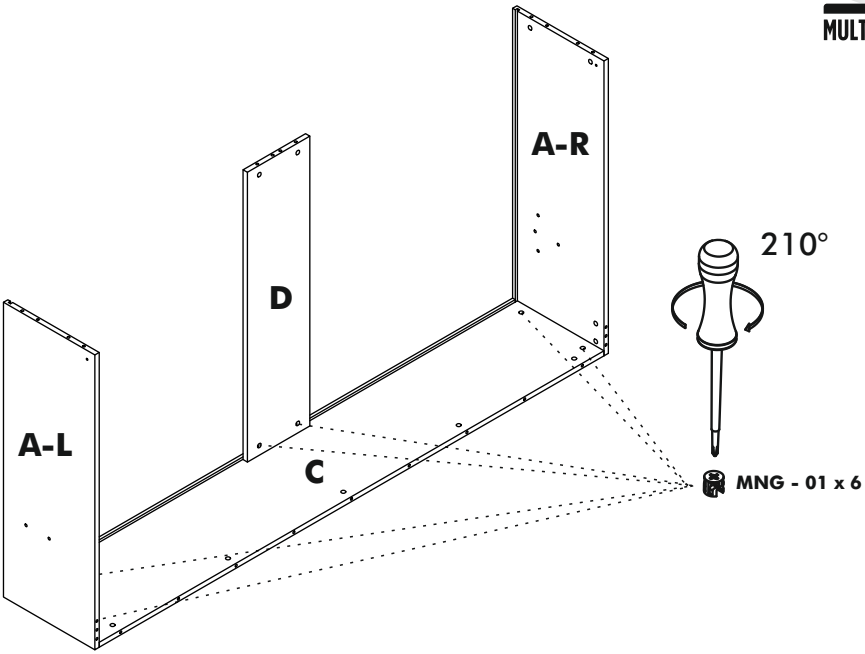

STEP 3

MNG - 01

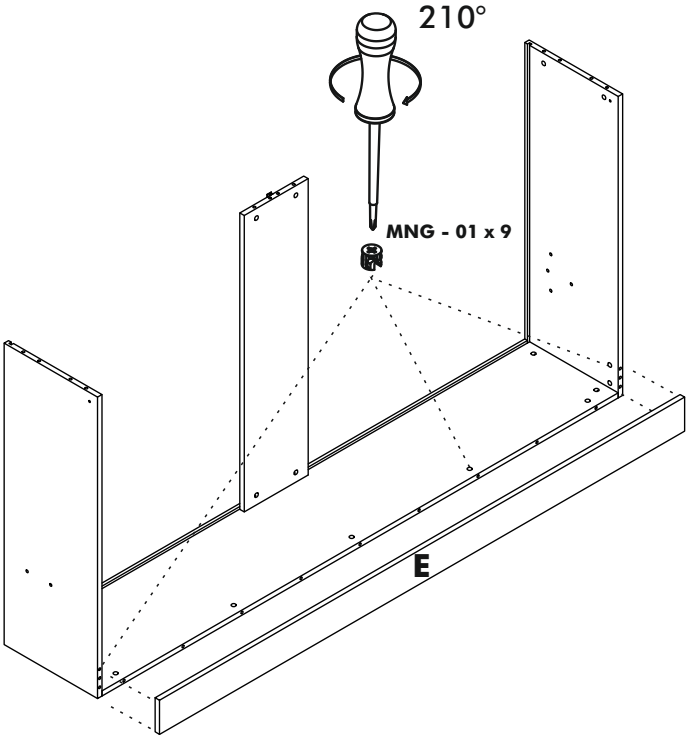

VIDEO

link

MULTiMO

STEP 4

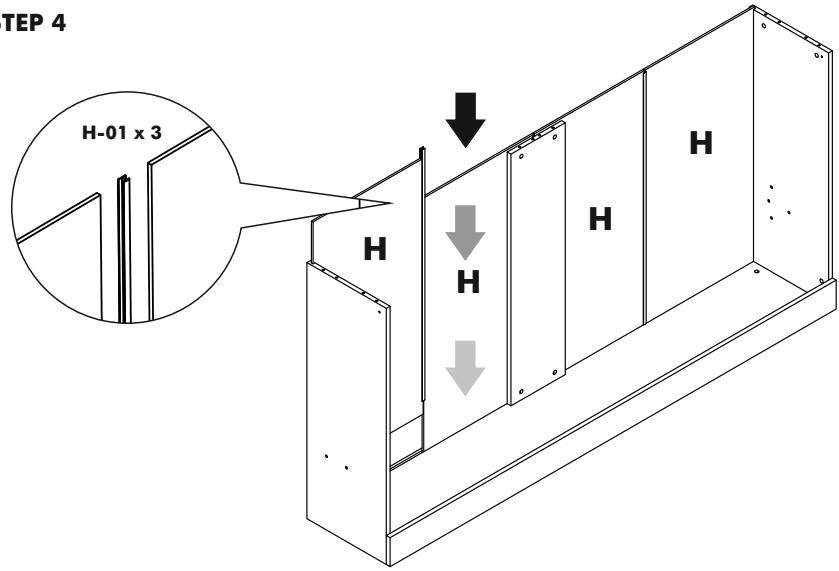

STEP 5

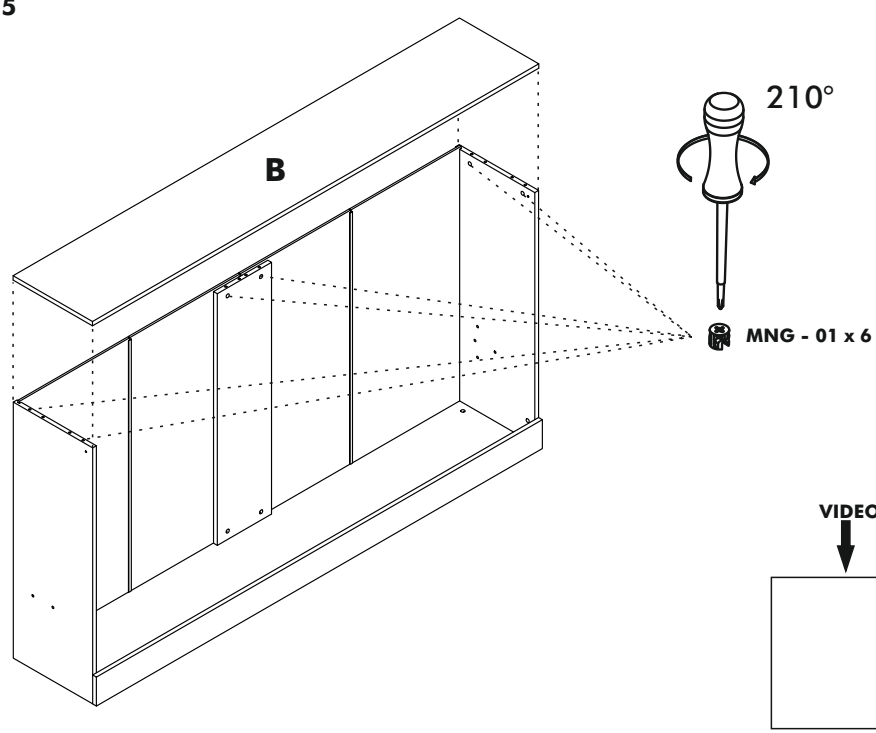

STEP 6

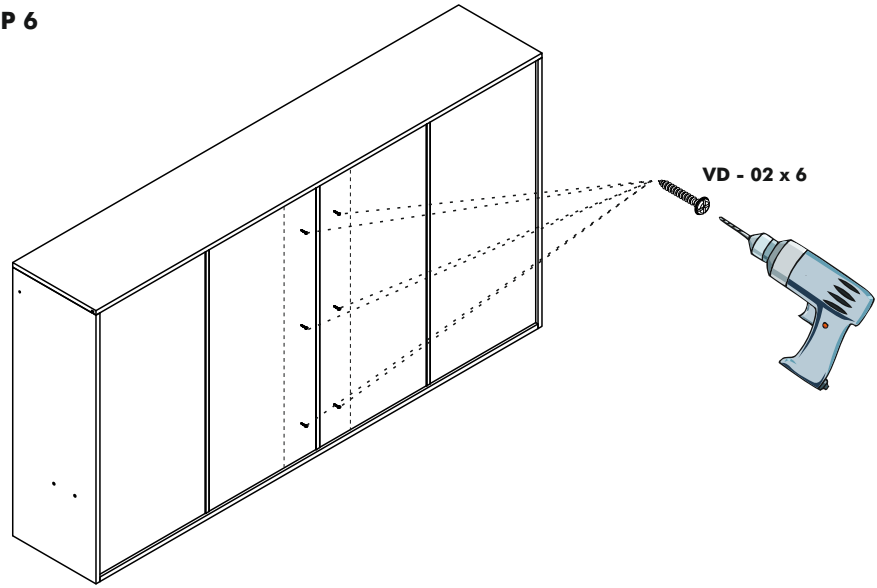

STEP 7

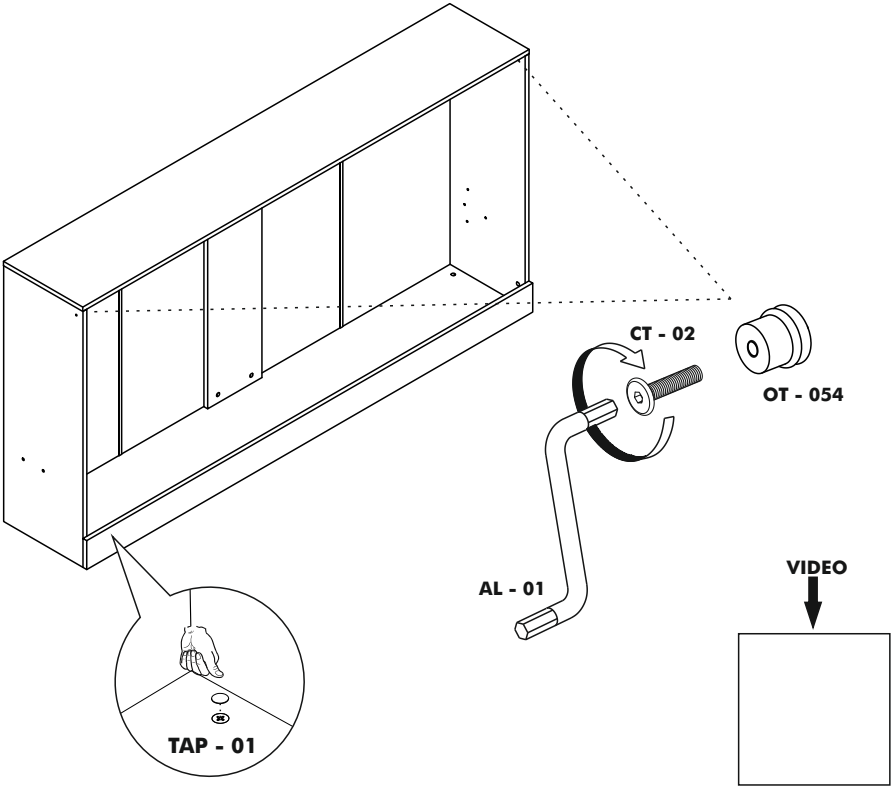

link

MULTiMO

STEP 8

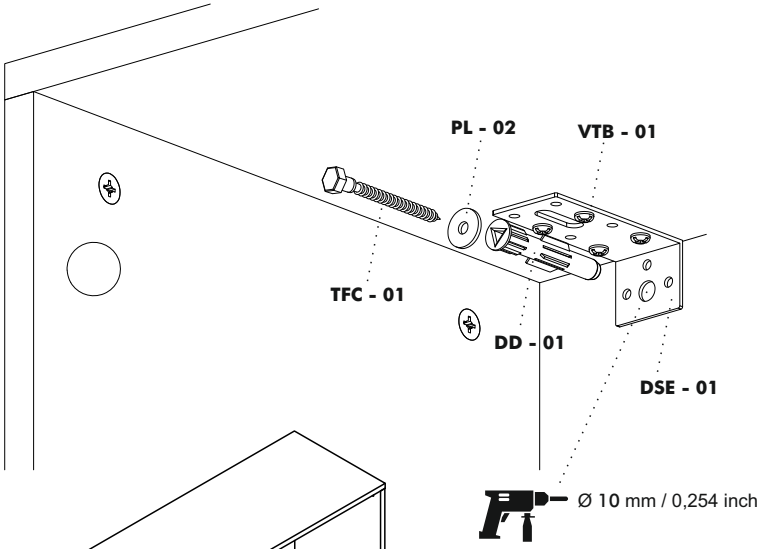

STEP 9

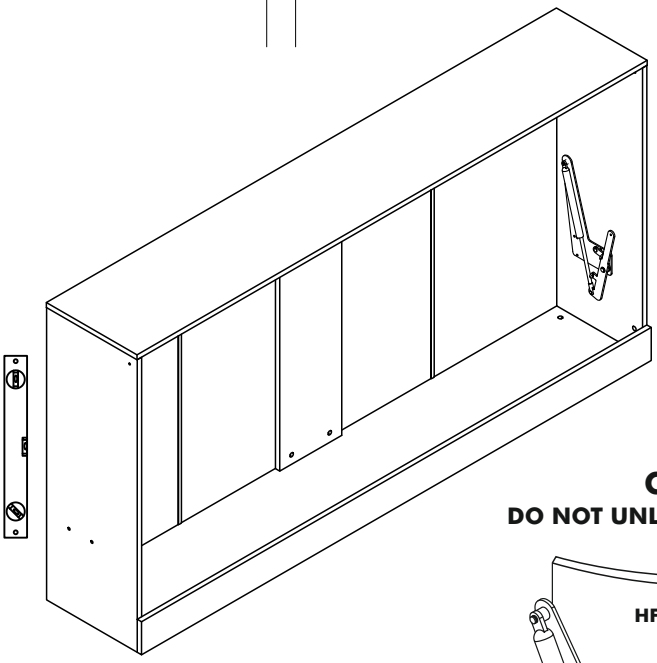

CAUTION

DO NOT UNLOCK BEFORE INSTALL

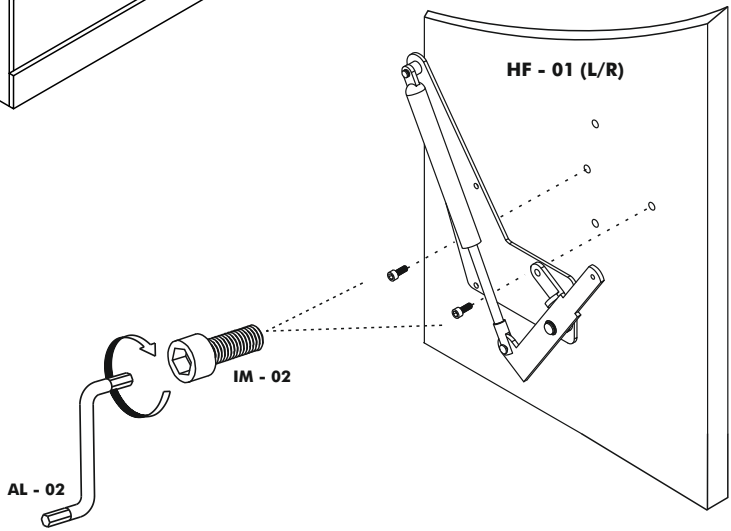

VIDEO

link

STEP 10

MNX - 02

KVL 01

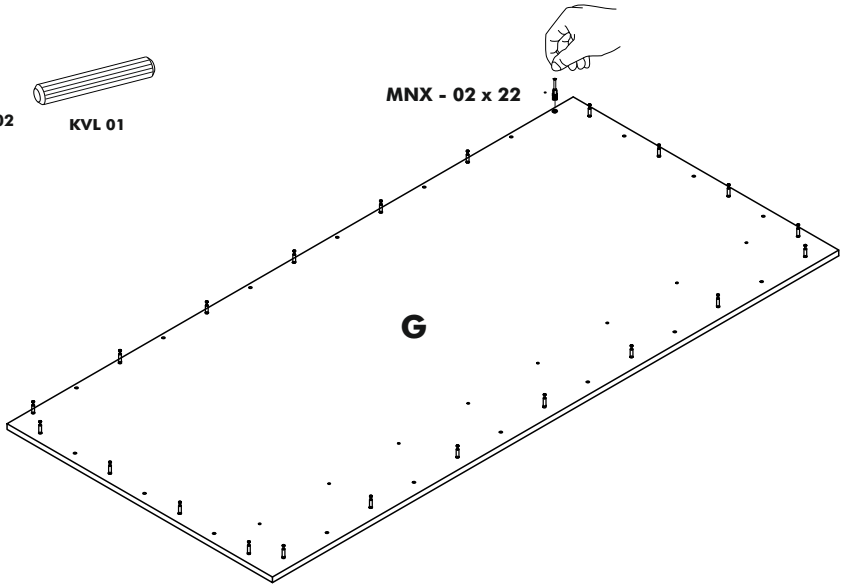

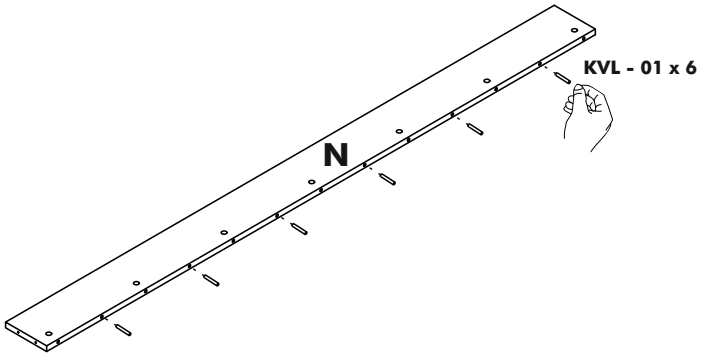

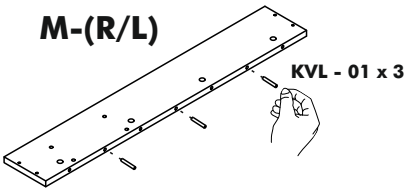

VIDEO

link

MULTiMO

STEP 11

MNG - 01

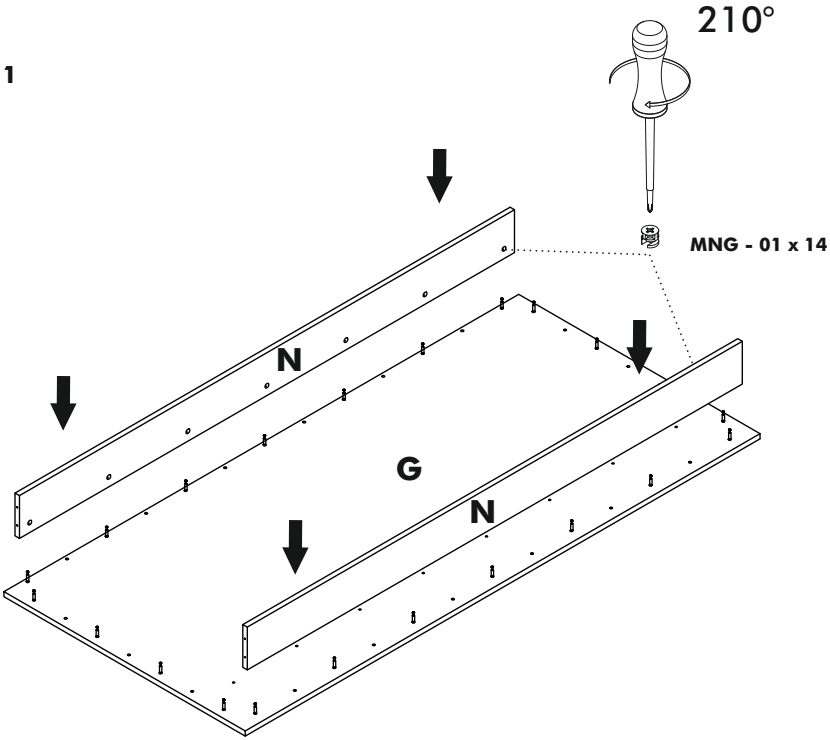

STEP 12

MNG - 01

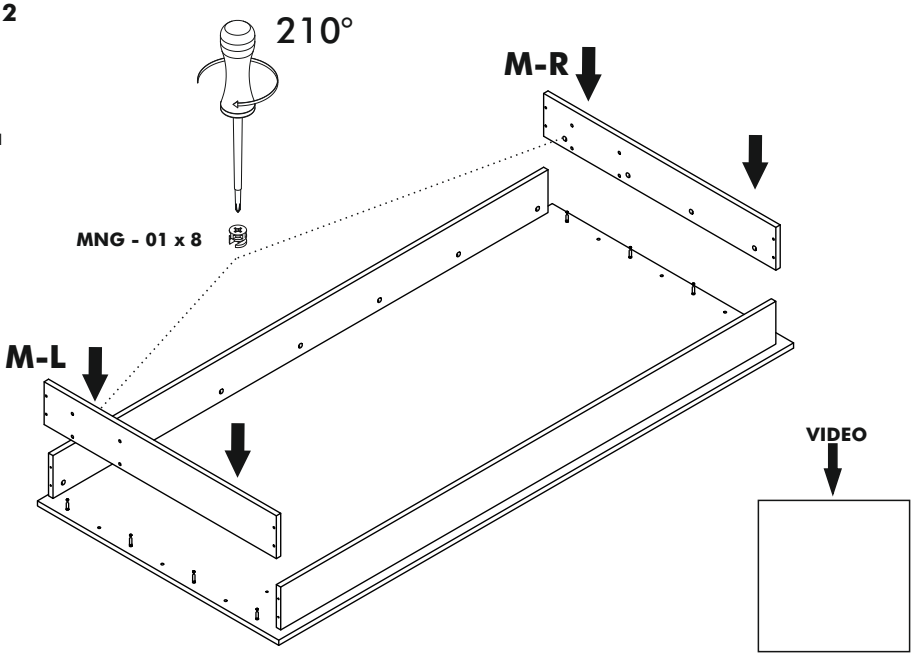

link

STEP 13

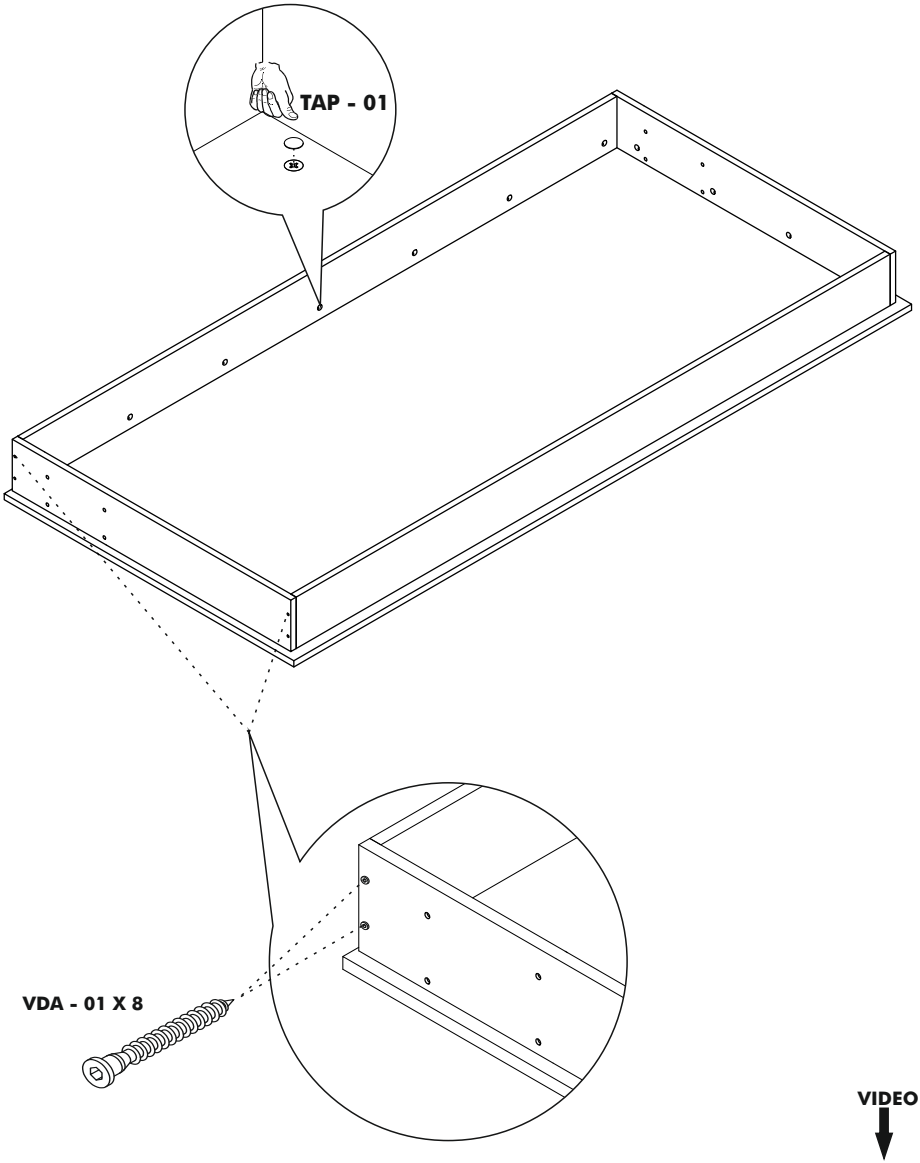

VIDEO

link

MULTiMO

STEP 14

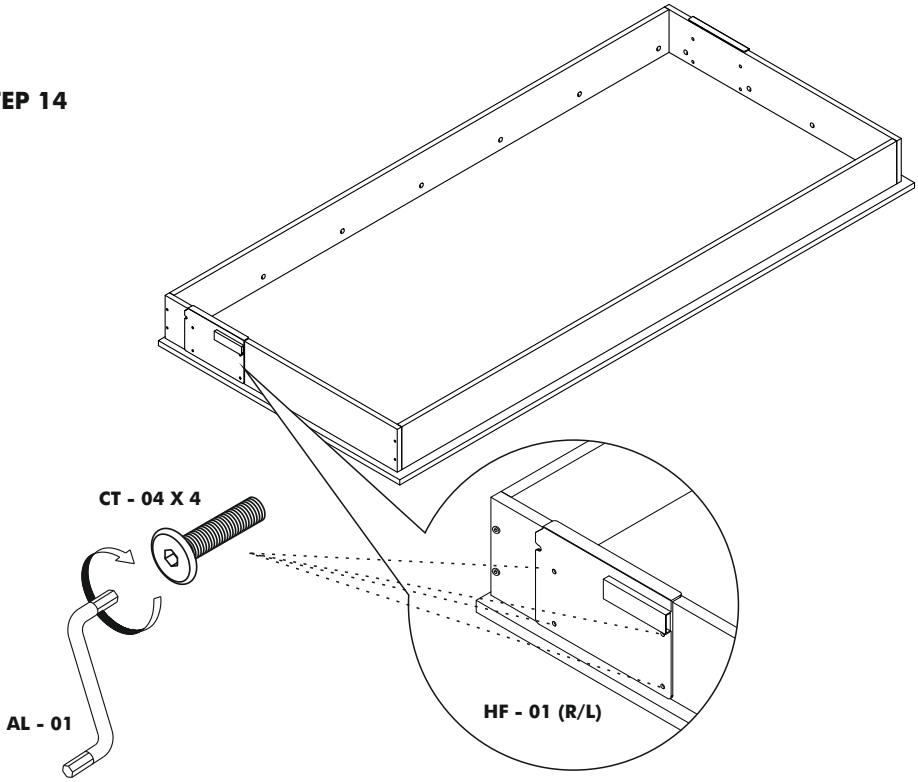

STEP 15

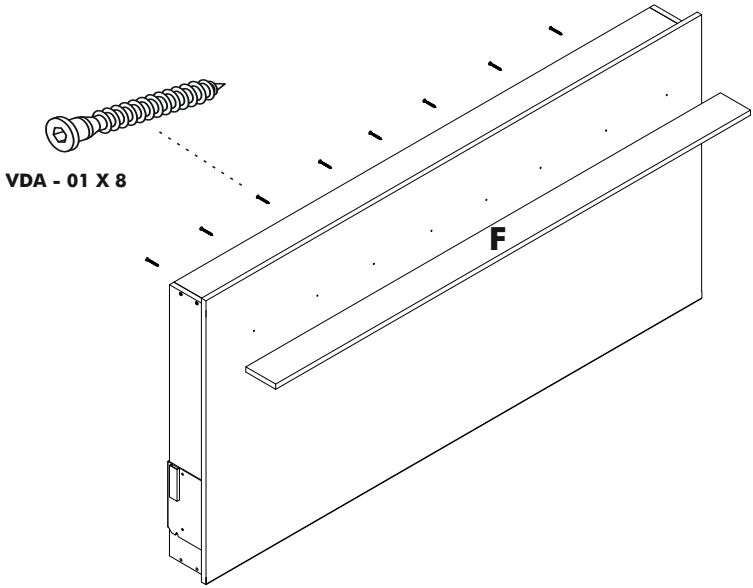

VIDEO

link

STEP 16

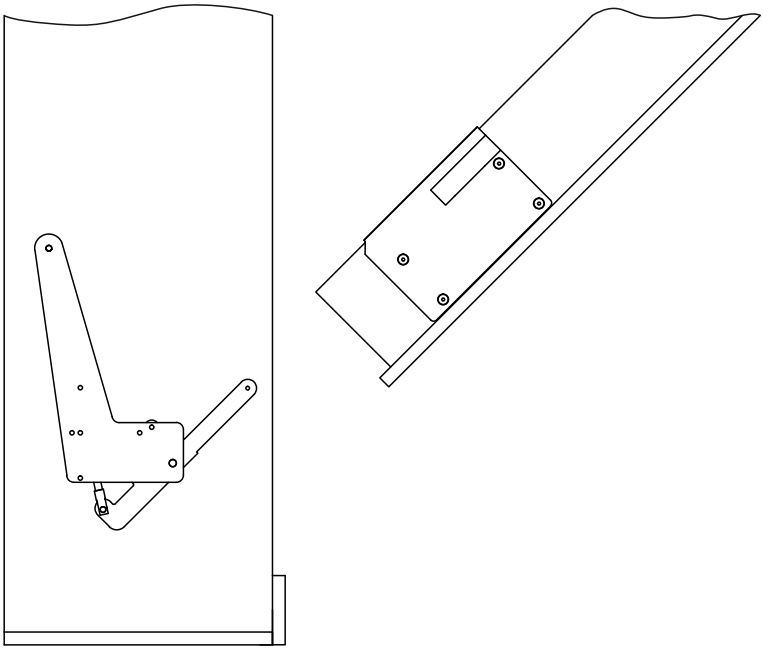

STEP 17

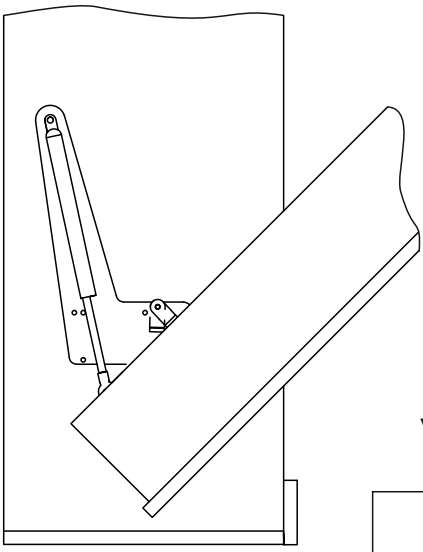

VIDEO

link

MULTiMO

STEP 18

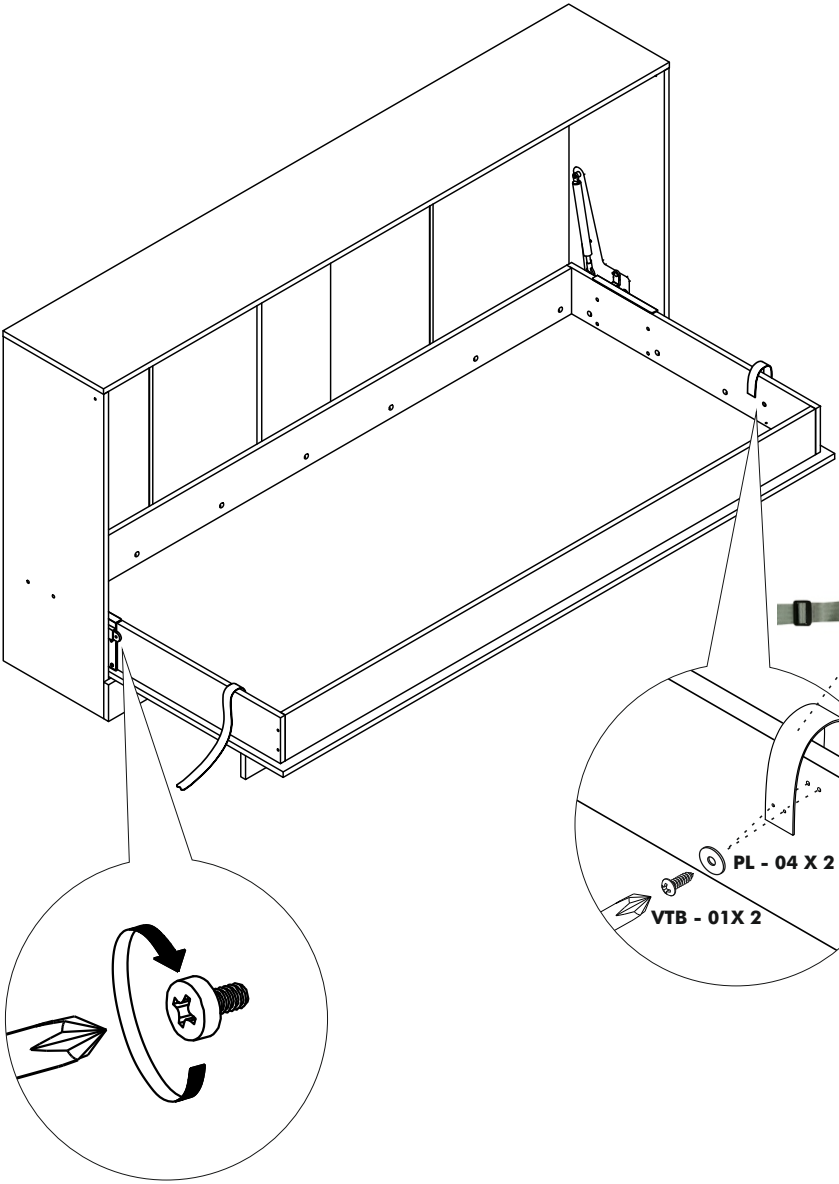

VIDEO

link

ATTENTION / HOW TO / READ ME / OWNER'S GUIDE

1. When mounting on a regular drywall, furniture must be fastened to wood or metal studs. Solid walls made of brick, concrete or similar strong material are also accaptable. Do not mount furniture to paper-mache or sheet rock like material without properly aaixing to stud.

2. For safety and product longevity you must periodically inspect the mounting and mechanical connections for integrity and tightness. Confirm hardware remains properly affixed and connections snug.

3. Wall Bed mattress thickness may not exceed 8 inch. Take care to remove pillows and excess blankets before closing. Doing so keeps mechanism free of obstruction and unnecessary stress.

4. Do not lean or rest heavy objects on side or top of furniture. This may cause balance issues and compromise the integrity of your mounting connections.

5. Please use the furniture's beds, desks and shelving as intended. Not designed to be sat, stood, leaned, jumped (etc) on. Improper use may cause personal injury and damage to property.

6. With seasonal humidity change you must inspect interior and exterior of furniture.

7. Single, Twin, Twin XL beds accommodate the weight of one person. Improperly sleeping more than one person risks injury to person and damage to property.

8. Before any un-mounting or disassembly please contact Multimo for technical support and instruction. Failure to properly detach risks injury to person and damage to property.

9. For Bunk Beds:
a. Always use provided ladder when accessing top bunk.
b. Be slow, careful and aware of surroundings when opening top bunk.
c. Do not horseplay. Beds are to be slept on only.
d. Some have legs that fully extend when open- be aware of where the leg is and will be.

MULTiMO

www.multimo.com